TOHJULET TRAKTOR

740

POWERSAFE

Importør:
Sønderup Maskinhandel A/S
Tlf. 98653255 Fax 98653300
lager@fbdk.dk – www.bcsmaskiner.dk

Code	Description	Notes
A02_0_116791	ENGINE PROTECTIONS	
A02_1_132271		
A.02.01.A0001_02	A02_02 - PROTEZIONI MOTORE (740_746_750)	
B01_0_116809	POWERSAFE CLUCH CONTROL	
B01_1_124997	POWERSAFE CLUCH CONTROL	
B01_2_132294	POWERSAFE CLUCH CONTROL	
B.01.01.A0001_03	B01_03 - COMANDO FRIZIONE POWERSAFE	
C01_0_116836	CYLINDER AND POWERSAFE CLUTCH	
C01_1_125029	CYLINDER AND POWERSAFE CLUTCH	
C.01.01.A0001_02	CYLINDER AND POWERSAFE CLUTCH	
D01_0_116850	POWERSAFE FILTER UNIT	
D01_1_132326	POWERSAFE FILTER UNIT	
D.01.01.A0001_02	POWERSAFE FILTER UNIT	
E01_0_116925	POWERSAFE CLUTCH HUB	
E01_1_132337	POWERSAFE CLUTCH HUB	
F01_0_116936	ENGINE FLANGES	
F01_1_132354	ENGINE FLANGES	
G02_0_117024	GEARBOX	
H03_0_117109	GEARS	
H03_1_132413		
I03_0_117280	WHEELS AXLE	
J03_0_117488	STEERING COLUMN	
J03_1_132497		
J03_2_132500	STEERING COLUMN (740_746_750)	
K03_0_117558	HANDLEBAR	
K03_1_132519		
L03_0_117642	HANDLEBAR CONTROLS	
L03_1_132553	HANDLEBAR CONTROLS	
L.03.01.A0001_02	HANDLEBAR CONTROLS	
M03_0_117772	CONTROLS	
M03_1_132596		
N02_0_117821	BRAKES	
N02_1_132637	BRAKES	
P01_0_117834	WHEELS	

Code	Description	Notes
N.02.01.A0001_02	BRAKES	
P01_1_132651	WHEELS	
Q01_0_117864	ELECTRIC STARTER	
Q01_1_136416	ELECTRIC STARTER	
R01_0_117889	STICKERS	
R02_0_117906	STICKERS	
R02_1_132700		
R.02.01.A0001_02	STICKERS	
R.02.01.A0001_03	STICKERS	

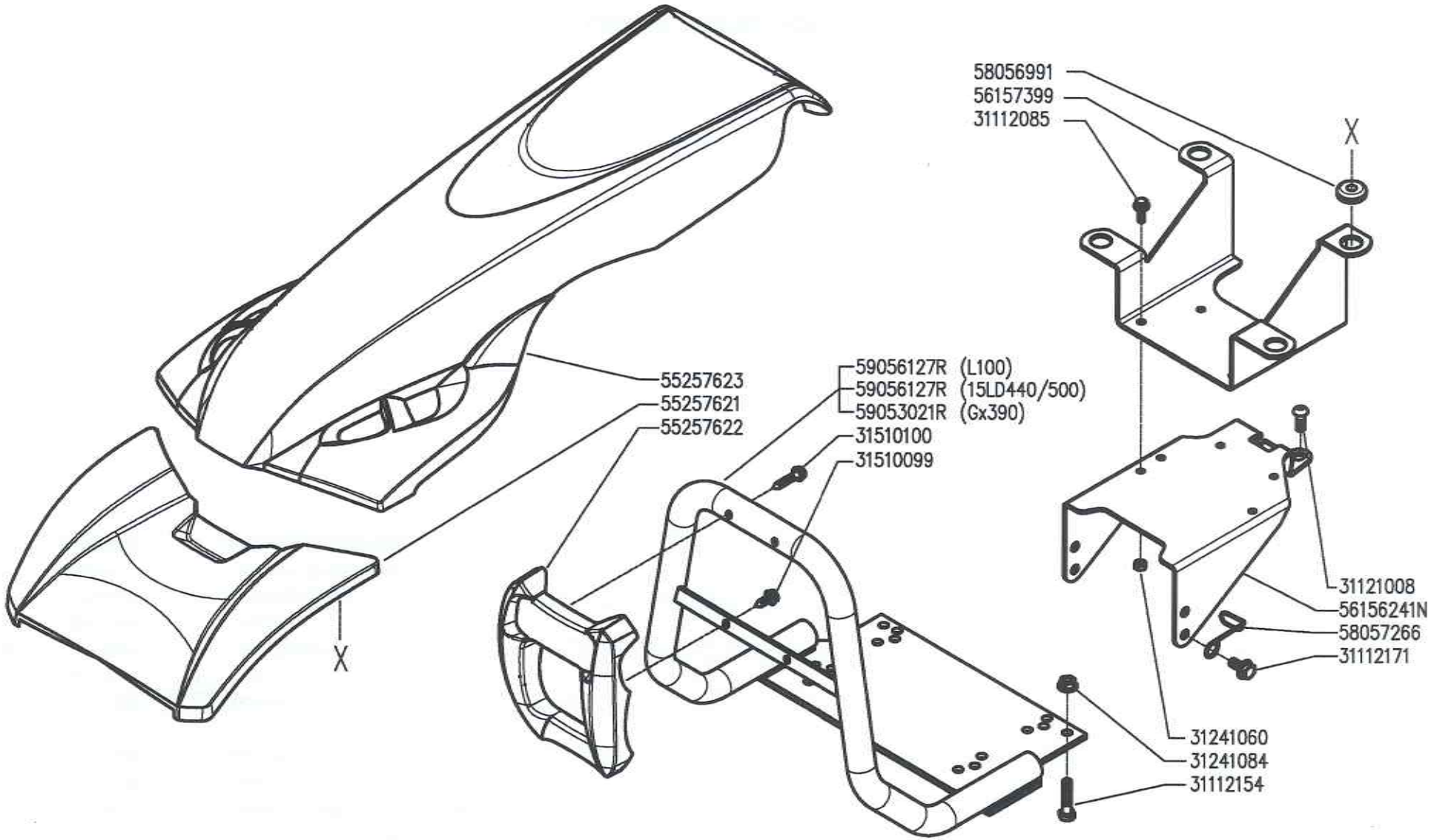

BCS	700 serie PS PowerSafe®	PROTEZIONI MOTORE (740 / 746) ENGINE PROTECTIONS PROTECTIONS MOTEUR PROTECCIONES MOTOR MOTORSCHUTZ	DALLA MACCHINA DE LA MAQUINA DE LA MACHINA FROM THE MACHINE AB DER MASCHINE N.	A02	Rev. 0
				05/2009	DITE.BCS - Scala 1:5

Pos.	Code	Q.ty	Description	Notes
31112085	31112085	1	SCREW TE M6X16 DIN 6921 8G	
31112154	31112154	1	SCREW TE M8X40 UNI 5739 8G	
31112171	31112171	1	SCREW TE C/F M8X16 DIN 6921	
31121008	31121008	1	SCREW TBCEI M10X16 ISO 7380	
31241060	31241060	1	SELFLOCK NUT M6	
31241084	31241084	1	SELFLOCK NUT M8 6S	
31510099	31510099	1	RIBBED SCREW 6,3X38 UNI 6950	
31510100	31510100	1	RIBBED SCREW 6,3X19 UNI 6950	
55257621	55257621	1	GUARD	
55257622	55257622	1	GUARD	
55257623	55257623	1	GUARD	
56157399	56157399	1	HOLDER	
58056991	58056991	1	CABLE GLAND	
58057266	58057266	1	HOLDER	
56156241	56156241N	1	TUNNEL LUNGO	
59053021	59053021R	1	COMPLETE BUMPERS	
59056127	59056127R	1	COMPLETE BUMPERS	

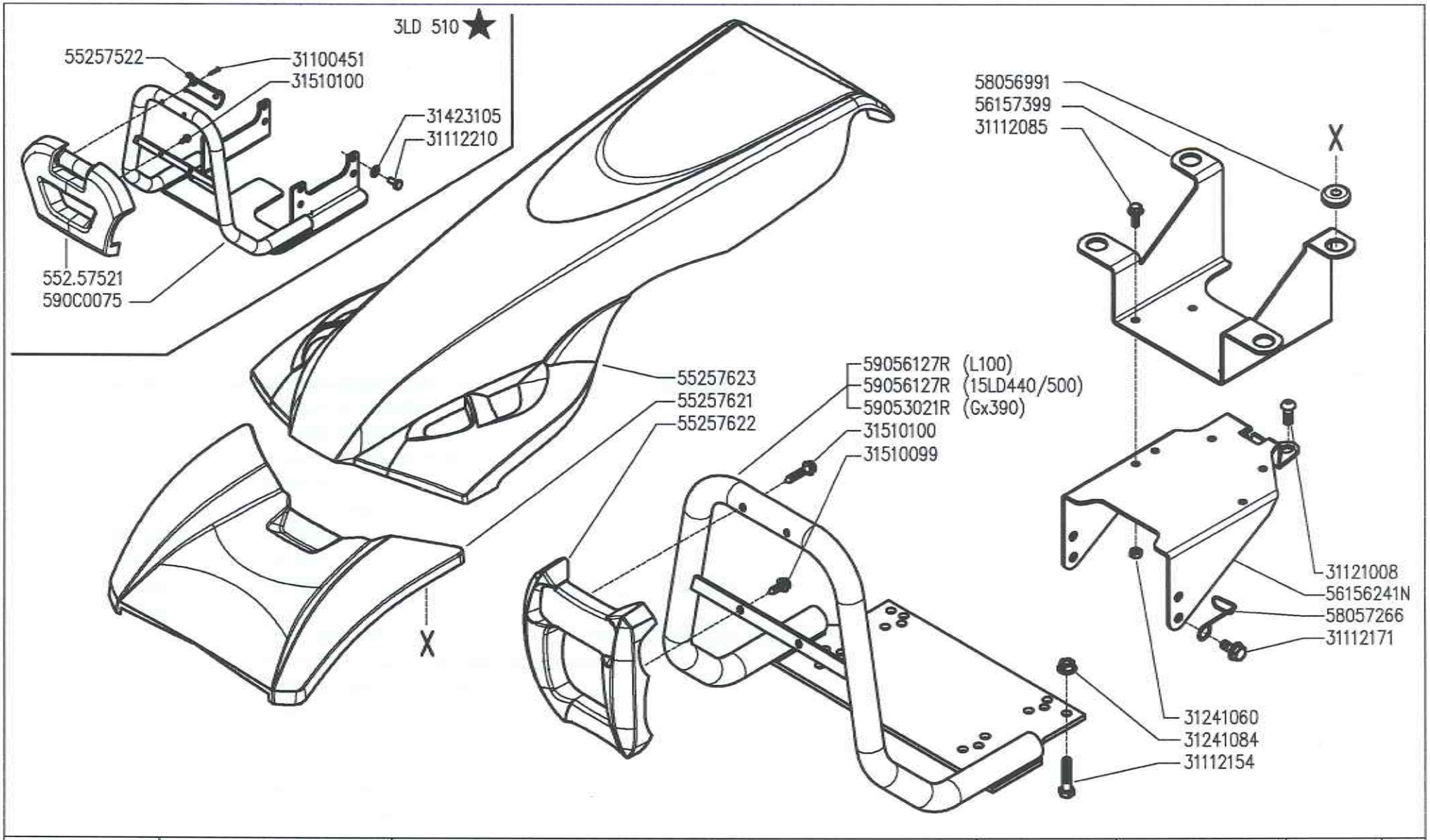

BCS

700 serie PS
PowerSafe®

PROTEZIONI MOTORE
(740 / 746 / 750★)

ENGINE PROTECTIONS
PROTECCIONES MOTOR
PROTECTIONS MOTEUR
MOTORSCHUTZ

DALLA MACCHINA
DE LA MAQUINA
DE LA MACHINA
FROM THE MACHINE
AB DER MASCHINE

★N.

AGGIORNAMENTO	
APLAZAMIENTO	
MISE A JOUR	
REVISION	
ANPASSUNG	

A02 — Rev. 1

11/2010

DITE.BCS - Scala 1:5

Pos.	Code	Q.ty	Description	Notes
31100451	31100451	1	SCREW 3,5X25	
31112085	31112085	1	SCREW TE M6X16 DIN 6921 8G	
31112154	31112154	1	SCREW TE M8X40 UNI 5739 8G	
31112171	31112171	1	SCREW TE C/F M8X16 DIN 6921	
31112210	31112210	1	SCREW TE M10X20 UNI 5739	
31121008	31121008	1	SCREW TBCEI M10X16 ISO 7380	
31241060	31241060	1	SELFLOCK NUT M6	
31241084	31241084	1	SELFLOCK NUT M8 6S	
31423105	31423105	1	SPRING WASHER 10,5	
31510099	31510099	1	RIBBED SCREW 6,3X38 UNI 6950	
31510100	31510100	1	RIBBED SCREW 6,3X19 UNI 6950	
55257521	55257521	1	BCS FRONT PLASTIC DESCRIPTION MC 2010	
55257522	55257522	1	HALF BEARING	
55257621	55257621	1	GUARD	
55257622	55257622	1	GUARD	
55257623	55257623	1	GUARD	
56157399	56157399	1	HOLDER	
58056991	58056991	1	CABLE GLAND	
58057266	58057266	1	HOLDER	
590C0075	590C0075	1	PARAURTI COMPLETO (3LD)	
56156241	56156241N	1	TUNNEL LUNGO	
59053021	59053021R	1	COMPLETE BUMPERS	
59056127	59056127R	1	COMPLETE BUMPERS	

A02_02 - PROTEZIONI MOTORE (740_746_750)

CODE REV
A.02.01.A0001_02

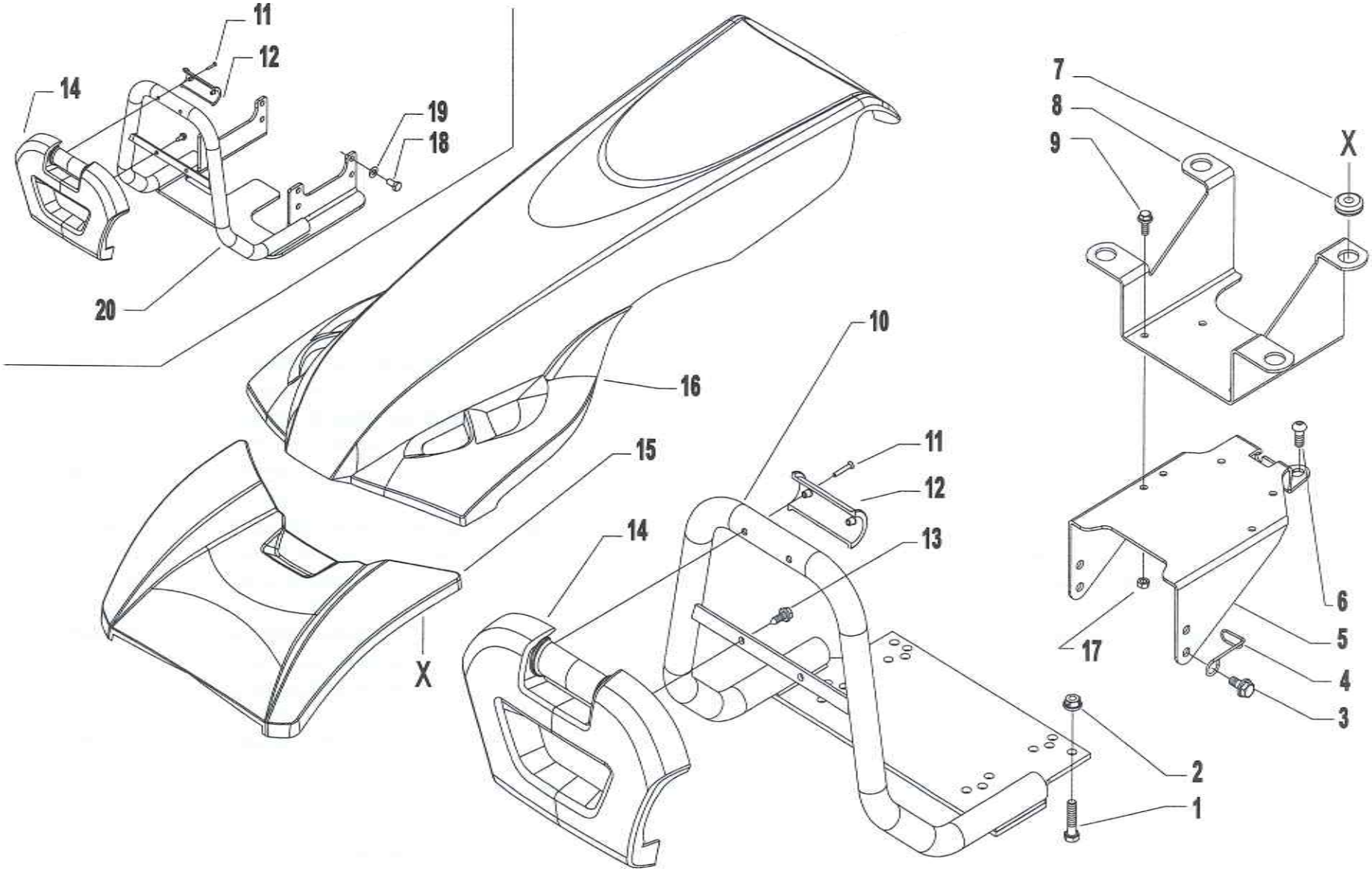

Pos.	Code	Q.ty	Description	Notes
1	31112154	1	SCREW TE M8X40 UNI 5739 8G	
2	31241084	1	SELFLOCK NUT M8 6S	
3	31112171	1	SCREW TE C/F M8X16 DIN 6921	
4	58057266	1	HOLDER	
5	56156241N	1	TUNNEL LUNGO	
6	31121008	1	SCREW TBCEI M10X16 ISO 7380	
7	58056991	1	CABLE GLAND	
8	56157399	1	HOLDER	
9	31112085	1	SCREW TE M6X16 DIN 6921 8G	
10	59053021R	1	COMPLETE BUMPERS	For GX390 engine
10	59056127R	1	COMPLETE BUMPERS	For motors L100-15LD440/500
11	31100451	1	SCREW 3,5X25	Replaces 55253018
12	55257522	1	HALF BEARING	Replaces 55253018
13	31510100	1	RIBBED SCREW 6,3X19 UNI 6950	Replaces 55253018
14	55257521	1	BCS FRONT PLASTIC DESCRIPTION MC 2010	
15	55257621	1	GUARD	
16	55257623	1	GUARD	
17	31241060	1	SELFLOCK NUT M6	
18	31112210	1	SCREW TE M10X20 UNI 5739	
19	31423105	1	SPRING WASHER 10,5	
20	590C0060H	1	PARAURTI COMPLETO (3LD)	Replaces 590C0075

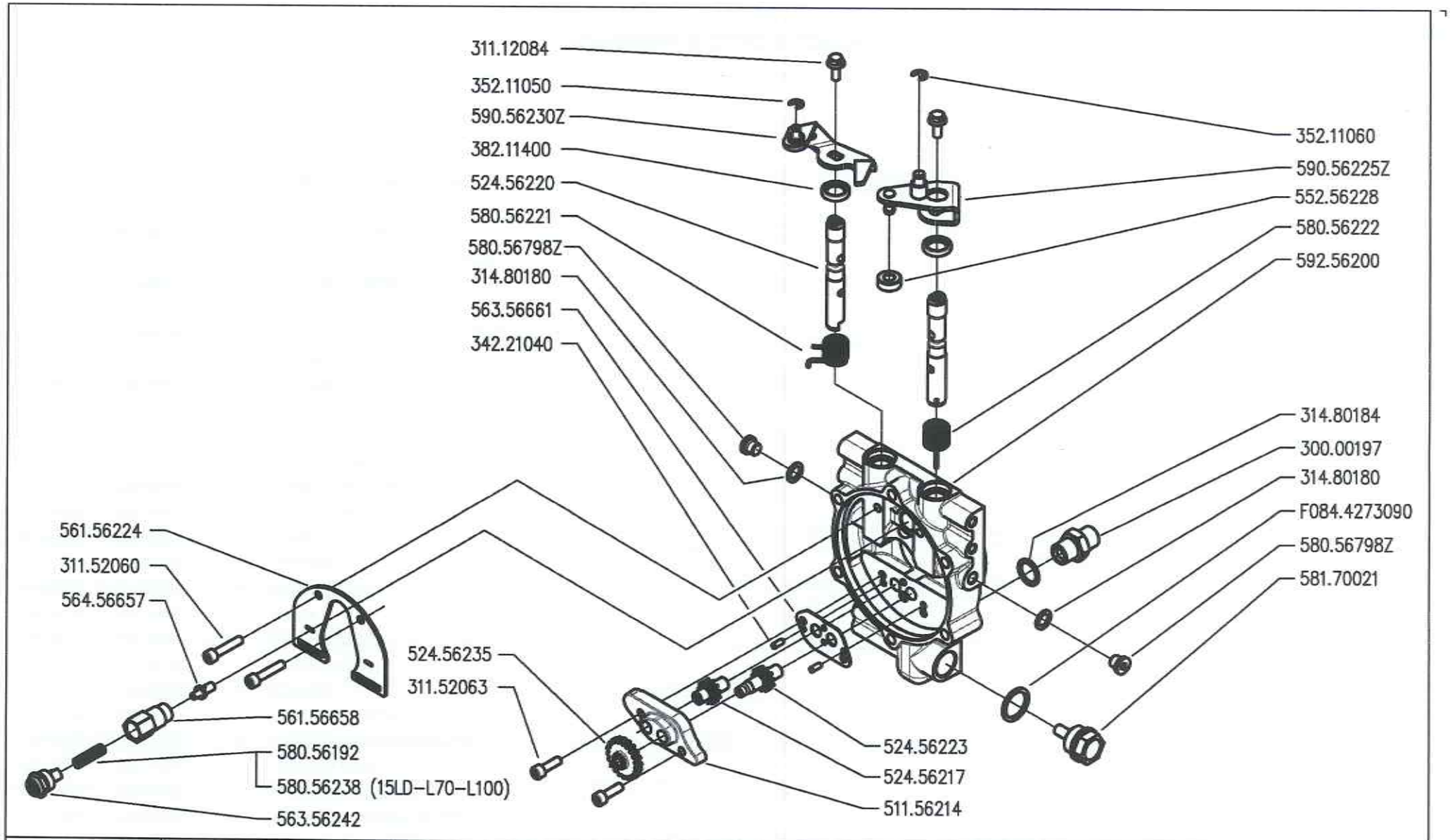

BCS

700 serie PS
PowerSafe®

COMANDO FRIZIONE POWERSAFE

POWERSAFE CLUTCH CONTROL

CONTROL EMBRAGUE POWERSAFE

CONTRÔLE EMBRAYAGE POWERSAFE

REGELUND POWERSAFE KUPPLUNG

DALLA MACCHINA
DE LA MAQUINA
DE LA MACHINA
FROM THE MACHINE
AB DER MASCHINE

N.

B01

Rev. 0

05/2009

DITE.BCS - Scala 1:6

Pos.	Code	Q.ty	Description	Notes
30000197	30000197	1	NIPPLE	
31112084	31112084	1	VITE TE C/F M6X14 DIN 6921 8G	
31152060	31152060	1	SCREW TCEI M6X30 UNI 5931	
31152063	31152063	1	SCREW TCEI M6X20 UNI 5931	
31480180	31480180	1	COPPER WASHER 10,2x16/1	
31480184	31480184	1	COPPER WASHER 16,7x22/1,5	
34221040	34221040	1	CYLINDRICAL PLUG	
35211050	35211050	1	SEEGER RING	
35211060	35211060	1	SEEGER RING E 6 UNI 7434	
38211400	38211400	1	OIL SEAL 14X22X4	
51156214	51156214	1	COVER	
52456217	52456217	1	DRIVEN GEAR	
52456220	52456220	1	DISTRIBUTOR	
52456223	52456223	1	GEAR	
52456235	52456235	1	PUMP GEAR	
55256228	55256228	1	ROLLER	
56156224	56156224	1	SHIELD	
56156658	56156658	1	VALVE SEAT	
56356242	56356242	1	TAPPO VALVOLA	
56356661	56356661	1	COUNTERWEIGHT	
56456657	56456657	1	VALVE	
58056192	58056192	1	SPRING	
58056221	58056221	1	SPRING	
58056222	58056222	1	SPRING	
58056238	58056238	1	SPRING	
58170021	58170021	1	PLUG	
59256200	59256200	1	CLUTCH FLANGE	
58056798	58056798Z	1	TAPPO 1/8 GAS DIN 908 ZNT/B	
59056225	59056225Z	1	CLUTCH LEVER	
59056230	59056230Z	1	LEVER	
F0844273	F0844273090	1	GASKET 22X28X1,5 CU 99,5	

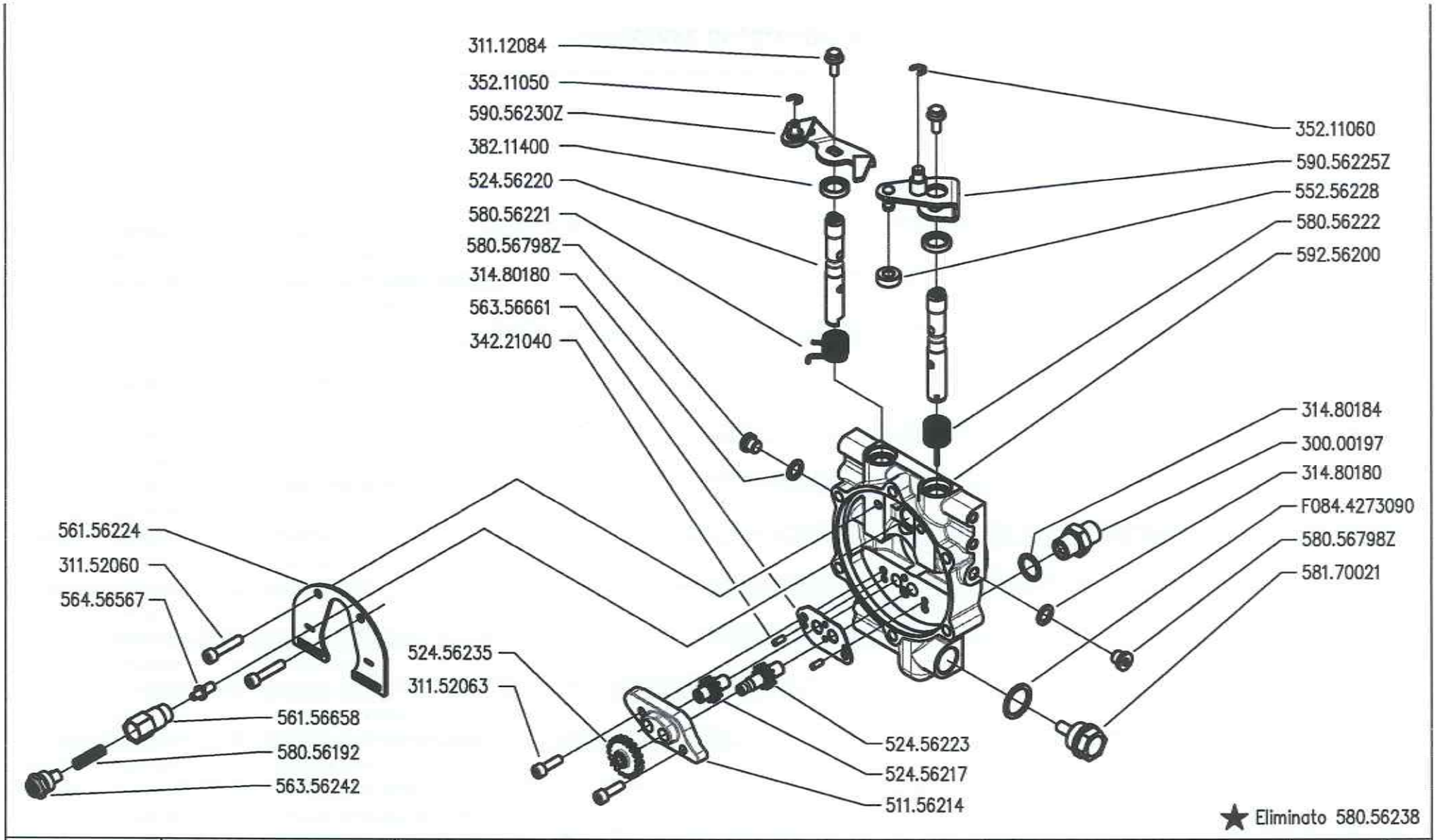

BCS

700 serie PS
PowerSafe®

COMANDO FRIZIONE POWERSAFE

POWERSAFE CLUTCH CONTROL

CONTROL EMBRAGUE POWERSAFE

CONTRÔLE EMBRAYAGE POWERSAFE

REGELUND POWERSAFE KUPPLUNG

DALLA MACCHINA
DE LA MAQUINA
DE LA MACHINA
FROM THE MACHINE
AB DER MASCHINE

★ N. 852604

B01 | Rev. 1

04/2010

DITE.BCS – Scala 1:6

Pos.	Code	Q.ty	Description	Notes
30000197	30000197	1	NIPPLE	
31112084	31112084	1	VITE TE C/F M6X14 DIN 6921 8G	
31152060	31152060	1	SCREW TCEI M6X30 UNI 5931	
31152063	31152063	1	SCREW TCEI M6X20 UNI 5931	
31480180	31480180	1	COPPER WASHER 10,2x16/1	
31480184	31480184	1	COPPER WASHER 16,7x22/1,5	
34221040	34221040	1	CYLINDRICAL PLUG	
35211050	35211050	1	SEEGER RING	
35211060	35211060	1	SEEGER RING E 6 UNI 7434	
38211400	38211400	1	OIL SEAL 14X22X4	
51156214	51156214	1	COVER	
52456217	52456217	1	DRIVEN GEAR	
52456220	52456220	1	DISTRIBUTOR	
52456223	52456223	1	GEAR	
52456235	52456235	1	PUMP GEAR	
55256228	55256228	1	ROLLER	
56156224	56156224	1	SHIELD	
56156658	56156658	1	VALVE SEAT	
56356242	56356242	1	TAPPO VALVOLA	
56356661	56356661	1	COUNTERWEIGHT	
56456657	56456657	1	VALVE	
58056192	58056192	1	SPRING	
58056221	58056221	1	SPRING	
58056222	58056222	1	SPRING	
58170021	58170021	1	PLUG	
59256200	59256200	1	CLUTCH FLANGE	
58056798	58056798Z	1	TAPPO 1/8 GAS DIN 908 ZNT/B	
59056225	59056225Z	1	CLUTCH LEVER	
59056230	59056230Z	1	LEVER	
F0844273	F0844273090	1	GASKET 22X28X1,5 CU 99,5	

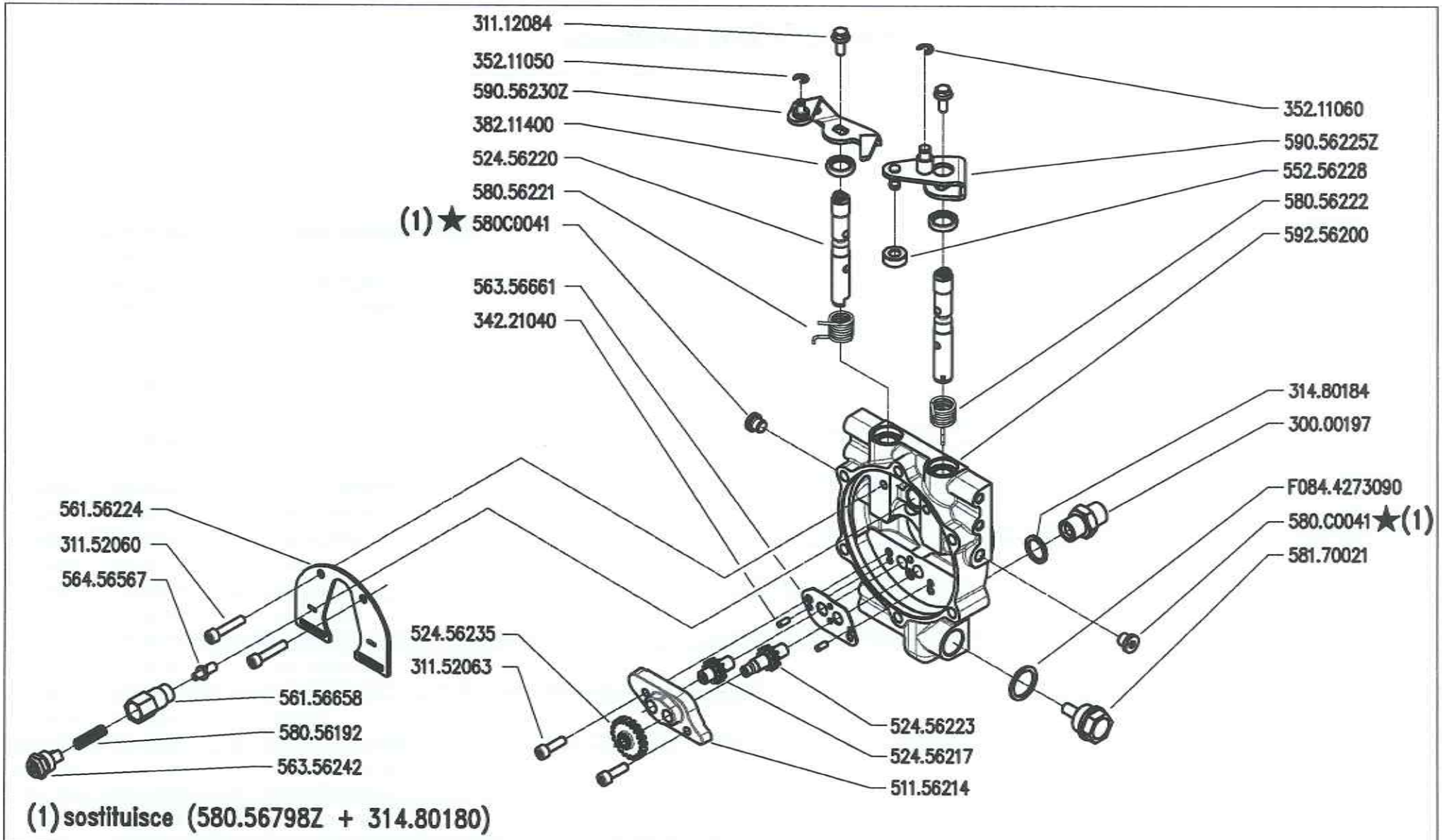

(1) sostituisce (580.56798Z + 314.80180)

BCS	700 serie PS PowerSafe®	COMANDO FRIZIONE POWERSAFE POWERSAFE CLUTCH CONTROL — CONTRÔLE EMBRAYAGE POWERSAFE CONTROL EMBRAGUE POWERSAFE — REGELUND POWERSAFE KUPPLUNG	DALLA MACCHINA DE LA MAQUINA DE LA MACHINA FROM THE MACHINE AB DER MASCHINE ★ N.	AGGIORNAMENTO APLAZAMIENTO MISE A JOUR REVISION ANPASSUNG	B01	Rev. 2
					09/2010	

DITE.BCS – Scala 1:6

Pos.	Code	Q.ty	Description	Notes
30000197	30000197	1	NIPPLE	
31112084	31112084	1	VITE TE C/F M6X14 DIN 6921 8G	
31152060	31152060	1	SCREW TCEI M6X30 UNI 5931	
31152063	31152063	1	SCREW TCEI M6X20 UNI 5931	
31480184	31480184	1	COPPER WASHER 16,7x22/1,5	
34221040	34221040	1	CYLINDRICAL PLUG	
35211050	35211050	1	SEEGER RING	
35211060	35211060	1	SEEGER RING E 6 UNI 7434	
38211400	38211400	1	OIL SEAL 14X22X4	
51156214	51156214	1	COVER	
52456217	52456217	1	DRIVEN GEAR	
52456220	52456220	1	DISTRIBUTOR	
52456223	52456223	1	GEAR	
52456235	52456235	1	PUMP GEAR	
55256228	55256228	1	ROLLER	
56156224	56156224	1	SHIELD	
56156658	56156658	1	VALVE SEAT	
56356242	56356242	1	TAPPO VALVOLA	
56356661	56356661	1	COUNTERWEIGHT	
56456657	56456657	1	VALVE	
58056192	58056192	1	SPRING	
58056221	58056221	1	SPRING	
58056222	58056222	1	SPRING	
580C0041	580C0041	1	TAPPO 1/8 GAS - 107601 CAST	
58170021	58170021	1	PLUG	
59256200	59256200	1	CLUTCH FLANGE	
59056225	59056225Z	1	CLUTCH LEVER	
59056230	59056230Z	1	LEVER	
F0844273	F0844273090	1	GASKET 22X28X1,5 CU 99,5	

B01_03 - COMANDO FRIZIONE POWERSAFE

CODE REV
B.01.01.A0001_03

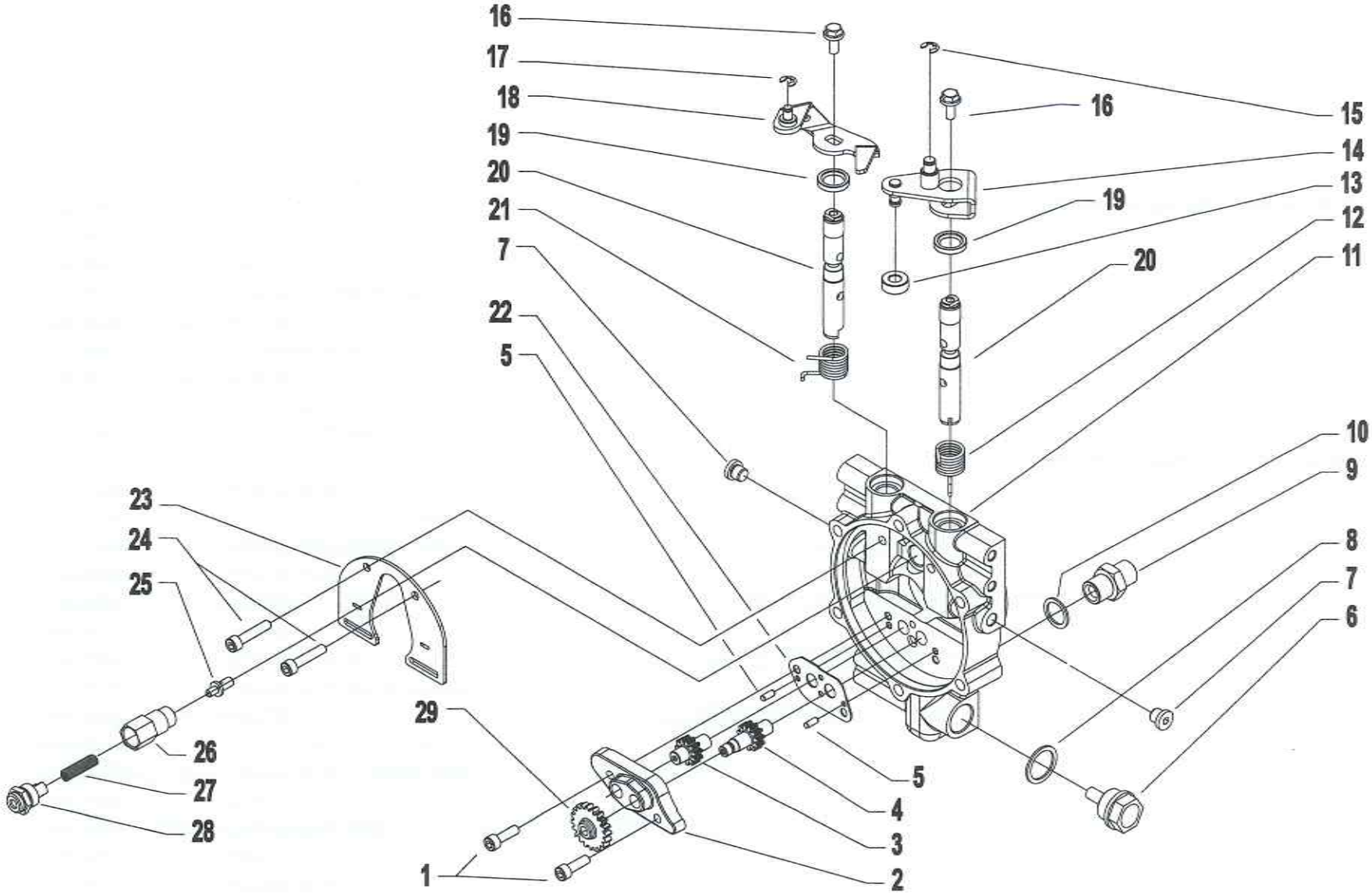

Pos.	Code	Q.ty	Description	Notes
1	31152063	1	SCREW TCEI M6X20 UNI 5931	
2	51156214	1	COVER	
3	52456217	1	DRIVEN GEAR	
4	52456223	1	GEAR	
5	34221040	1	CYLINDRICAL PLUG	
6	58170021	1	PLUG	
7	580C0041	1	TAPPO 1/8 GAS - 107601 CAST	
8	F0844273090	1	GASKET 22X28X1,5 CU 99,5	
9	30000197	1	NIPPLE	
10	31480184	1	COPPER WASHER 16,7x22/1,5	
11	59256200	1	CLUTCH FLANGE	
12	58056222	1	SPRING	
13	55256228	1	ROLLER	
14	59056225Z	1	CLUTCH LEVER	
15	35211060	1	SEEGER RING E 6 UNI 7434	
16	31112084	1	VITE TE C/F M6X14 DIN 6921 8G	
17	35211050	1	SEEGER RING	
18	59056298Z	1	LEVA STOP C.TA ZNT	Replaces 59056230Z from serial 901289
19	38211400	1	OIL SEAL 14X22X4	
20	52456220	1	DISTRIBUTOR	
21	58056221	1	SPRING	
22	56356661	1	COUNTERWEIGHT	
23	56156224	1	SHIELD	
24	31152060	1	SCREW TCEI M6X30 UNI 5931	
25	56456657	1	VALVE	
26	56156658	1	VALVE SEAT	
27	58056683	1	MOLLA VALVOLA 2.5	Replaces 58056192 from serial number 883609
28	56356242	1	TAPPO VALVOLA	

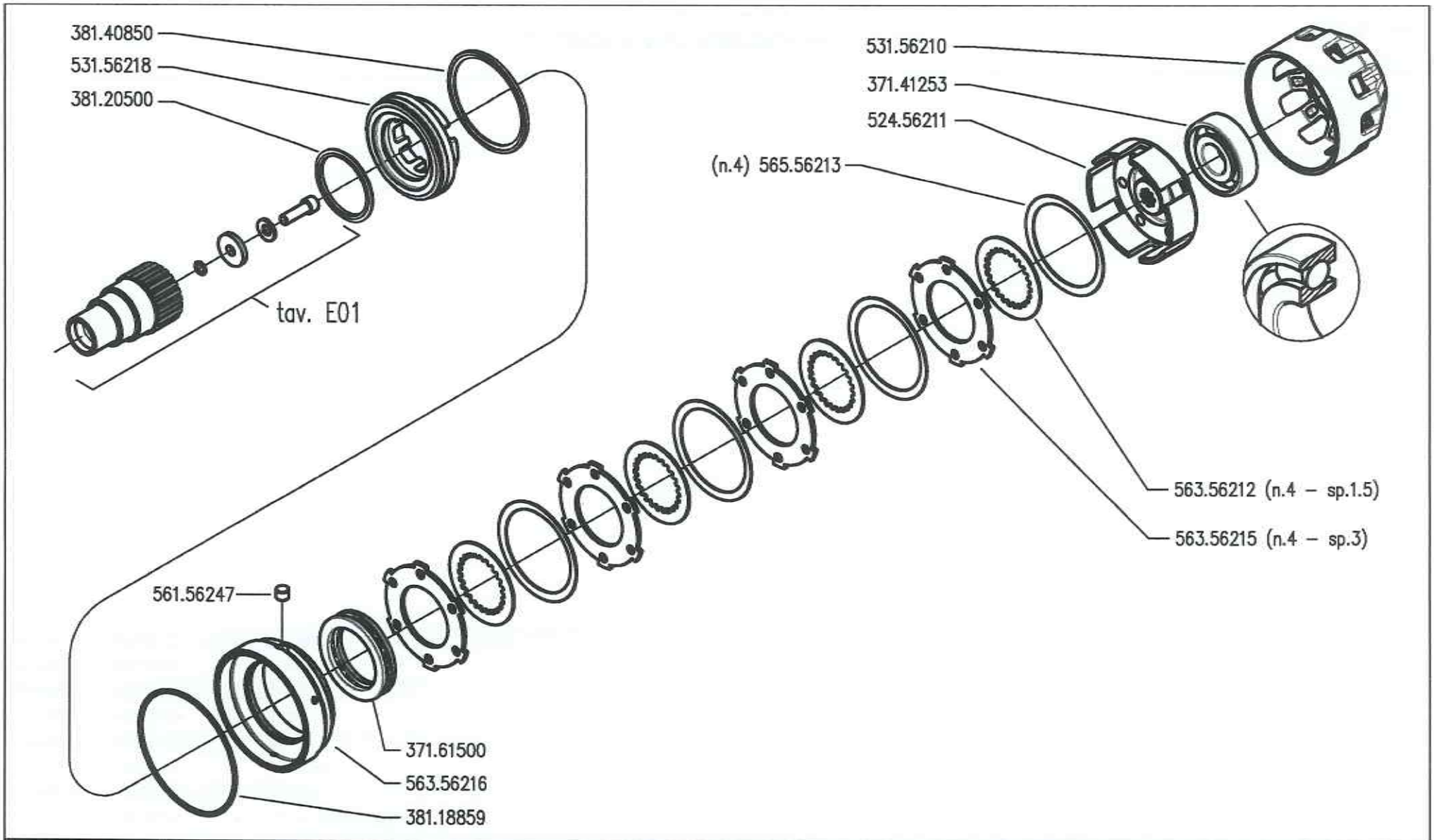

BCS	700 serie PS PowerSafe®	CILINDRO E FRIZIONE POWERSAFE CYLINDER AND POWERSAFE CLUTCH CYLINDER ET EMBRAYAGE POWERSAFE CILINDRO Y EMBRAGUE POWERSAFE ZILINDER UND POWERSAFE KUPPLUNG	DALLA MACCHINA DE LA MAQUINA DE LA MACHINA FROM THE MACHINE AB DER MASCHINE N.		C01	Rev. 0
					05/2009	

DITE.BCS – Scala 1:6

Pos.	Code	Q.ty	Description	Notes
37141253	37141253	1	BEARING	
37161500	37161500	1	BEARING	
38118859	38118859	1	O-RING	
38120500	38120500	1	RING	
38140850	38140850	1	RING	
52456211	52456211	1	CLUTCH HOUSING	
53156210	53156210	1	SUMP	
53156218	53156218	1	PISTON	
56156247	56156247	1	PIN	
56356212	56356212	1	DISC	
56356215	56356215	1	DISC	
56356216	56356216	1	RING	
56556213	56556213	1	SPRING	

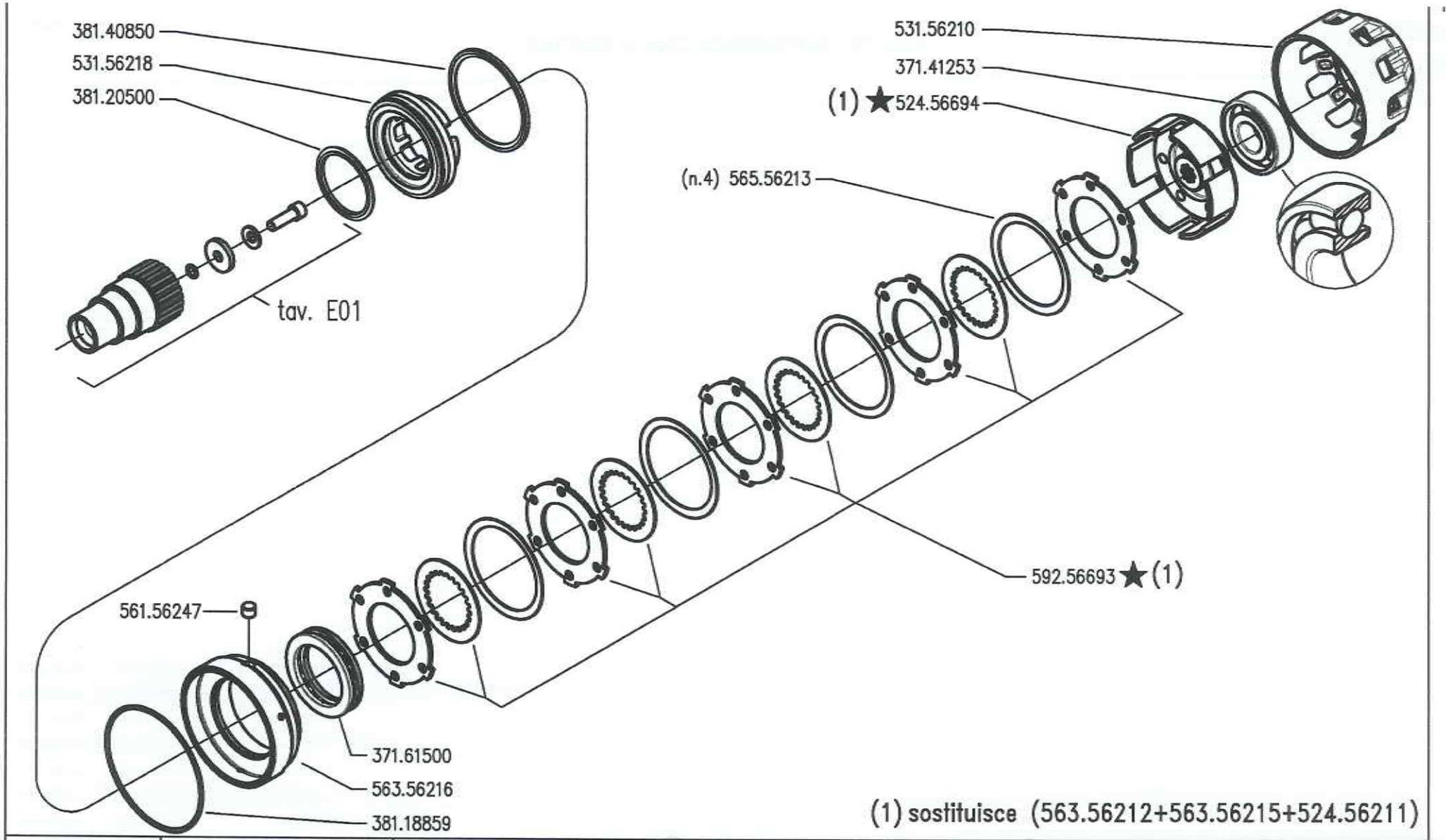

(1) sostituisce (563.56212+563.56215+524.56211)

BCS	700 serie PS PowerSafe®	CILINDRO E FRIZIONE POWERSAFE CYLINDER AND POWERSAFE CLUTCH CYLINDER ET EMBRAYAGE POWERSAFE CILINDRO Y EMBRAGUE POWERSAFE ZILINDER UND POWERSAFE KUPPLUNG	DALLA MACCHINA DE LA MAQUINA DE LA MACHINA FROM THE MACHINE AB DER MASCHINE ★ N.	852604	C01	Rev. 1
					04/2010	

DITE.BCS - Scala 1:6

Pos.	Code	Q.ty	Description	Notes
37141253	37141253	1	BEARING	
37161500	37161500	1	BEARING	
38118859	38118859	1	O-RING	
38120500	38120500	1	RING	
38140850	38140850	1	RING	
52456694	52456694	1	CAMPANA FRIZIONE	
53156210	53156210	1	SUMP	
53156218	53156218	1	PISTON	
56156247	56156247	1	PIN	
56356216	56356216	1	RING	
56556213	56556213	1	SPRING	
59256693	59256693	1	9 DISC CLUTCH	

CYLINDER AND POWERSAFE CLUTCH

CODE REV
C.01.01.A0001_02

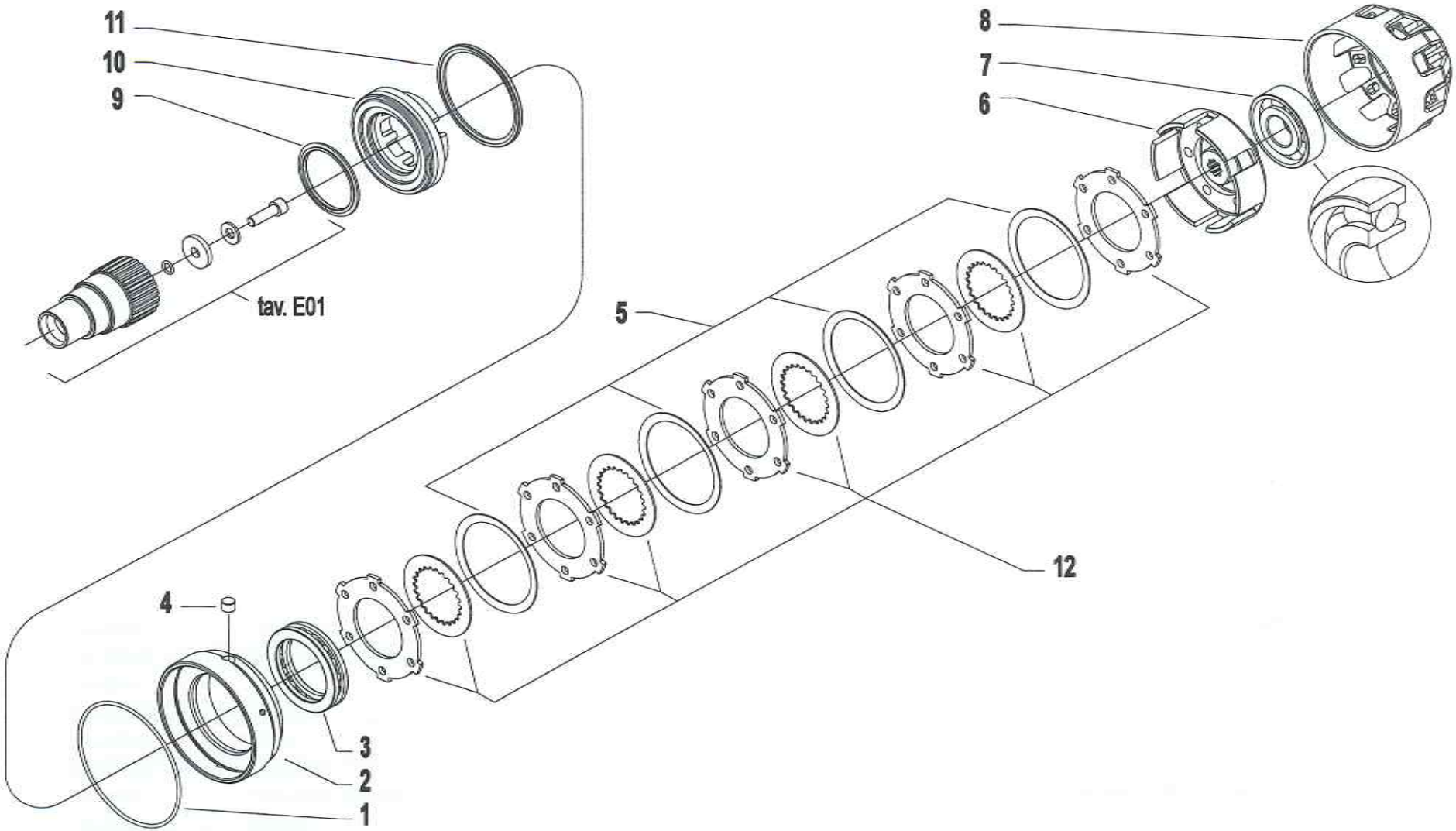

Pos.	Code	Q.ty	Description	Notes
1	38118859	1	O-RING	
2	56356216	1	RING	
3	37161500	1	BEARING	
4	56156247	1	PIN	
5	56556213	1	SPRING	
6	52456694	1	CAMPANA FRIZIONE	Replaces 56356212 + 56356215 + 52456211
7	37141253	1	BEARING	
8	53156210	1	SUMP	
9	38120500	1	RING	
10	53156218	1	PISTON	
11	38140850	1	RING	
12	59256693	1	9 DISC CLUTCH	Replaces 56356212 + 56356215 + 52456211

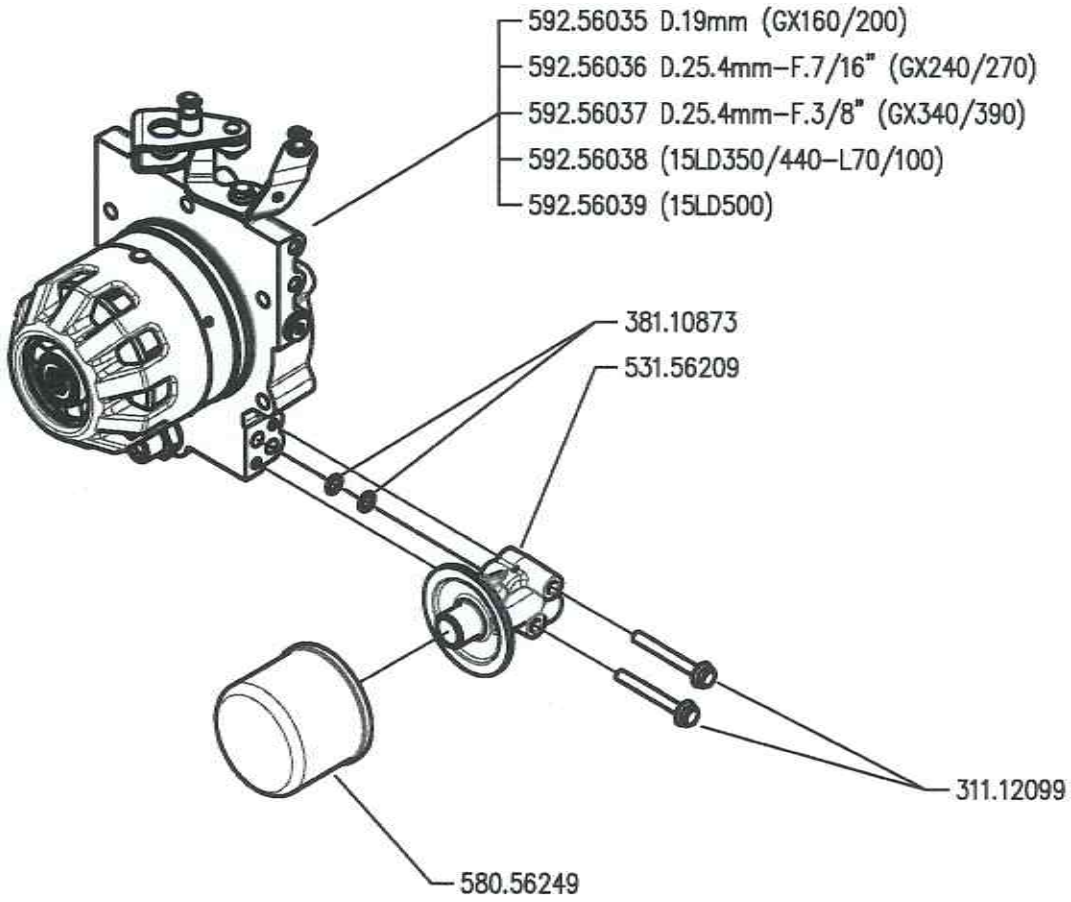

BCS	700 serie PS PowerSafe®	GRUPPO FILTRO POWERSAFE POWERSAFE FILTER UNIT — FILTRE POWERSAFE FILTRO POWERSAFE — POWERSAFE FILTER	DALLA MACCHINA DE LA MAQUINA DE LA MACHINA FROM THE MACHINE AB DER MASCHINE N.		D01	Rev. 0
					05/2009	

DITE.BCS - Scala 1:6

Pos.	Code	Q.ty	Description	Notes
31112099	31112099	1	VITE TE C/F M6X50 DIN 6921 8G	
38110873	38110873	1	O-RING 108 (8,73X1,78)	
53156209	53156209	1	CONNECTION	
58056249	58056249	1	FILTER	
59256035	59256035	1	POWERSAFE CLUTCH ASSY Q19	
59256036	59256036	1	POWERSAFE CLUTCH	
59256037	59256037	1	GR.FRIZ.POWERSAFE Q25.4 (3/8)	
59256038	59256038	1	POWERSAFE CLUTCH	
59256039	59256039	1	POWERSAFE CLUTCH ASSY	

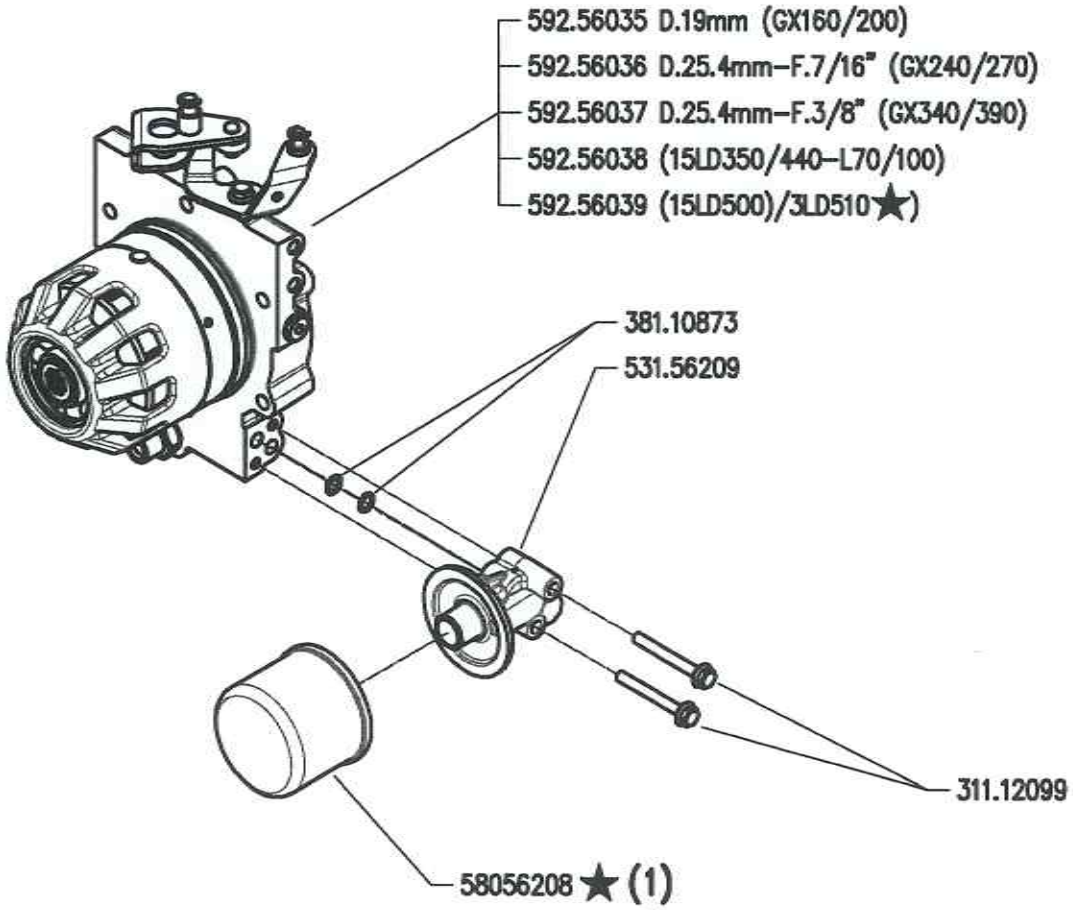

(1) sostituisce 580.56249

BCS	700 serie PS PowerSafe®	GRUPPO E FILTRO POWERSAFE POWERSAFE FILTER AND UNIT — FILTRE POWERSAFE FILTRO POWERSAFE — POWERSAFE FILTER	DALLA MACCHINA DE LA MAQUINA DE LA MACHINA FROM THE MACHINE AB DER MASCHINE ★ N.	AGGIORNAMENTO APLAZAMIENTO MISE A JOUR REVISION ANPASSUNG	D01	Rev. 1 11/2010

DITE.BCS - Scala 1:6

Pos.	Code	Q.ty	Description	Notes
31112099	31112099	1	VITE TE C/F M6X50 DIN 6921 8G	
38110873	38110873	1	O-RING 108 (8,73X1,78)	
53156209	53156209	1	CONNECTION	
58056208	58056208	1	FILTER	
59256035	59256035	1	POWERSAFE CLUTCH ASSY Q19	
59256036	59256036	1	POWERSAFE CLUTCH	
59256037	59256037	1	GR.FRIZ.POWERSAFE Q25.4 (3/8)	
59256038	59256038	1	POWERSAFE CLUTCH	
59256039	59256039	1	POWERSAFE CLUTCH ASSY	

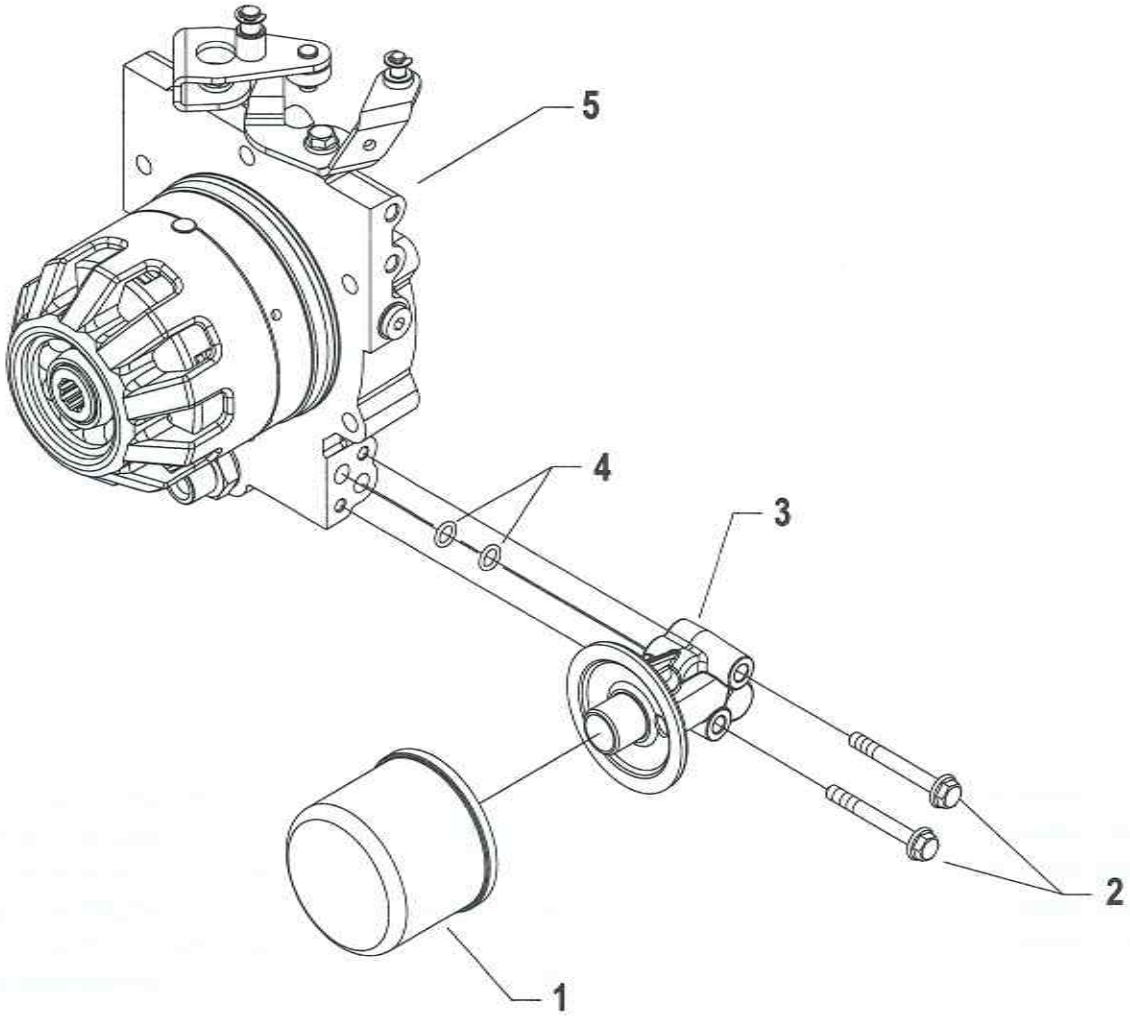
5
4
3
2
1

Pos.	Code	Q.ty	Description	Notes
1	58056208	1	FILTER	
2	31112099	1	VITE TE C/F M6X50 DIN 6921 8G	
3	53156209	1	CONNECTION	
3	53156659	1	CONNECTION	Powersafe EasyDrive
4	38110873	1	O-RING 108 (8,73X1,78)	
5	59256035	1	POWERSAFE CLUTCH ASSY Q19	For motors GX160/200
5	59256036	1	POWERSAFE CLUTCH	For motors GX240/270-EX21
5	59256037	1	GR.FRIZ.POWERSAFE Q25.4 (3/8)	For motors GX340/390
5	59256038	1	POWERSAFE CLUTCH	For motors 15LD350/440-L70/100
5	59256039	1	POWERSAFE CLUTCH ASSY	For motors 15LD500/3LD510

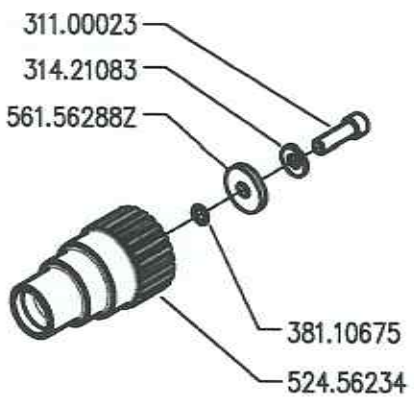

GX 160–200

GX 240–270–340–390

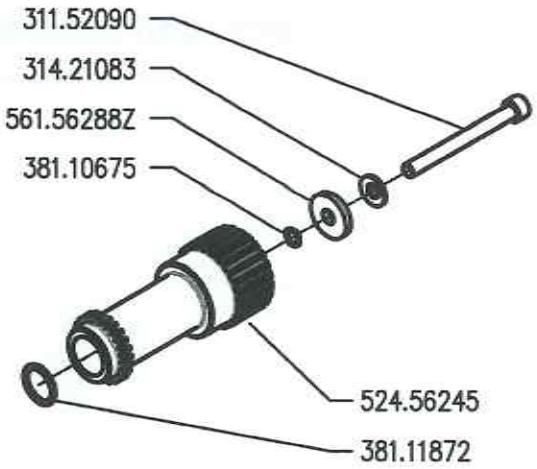

15LD350–440 – L70–100

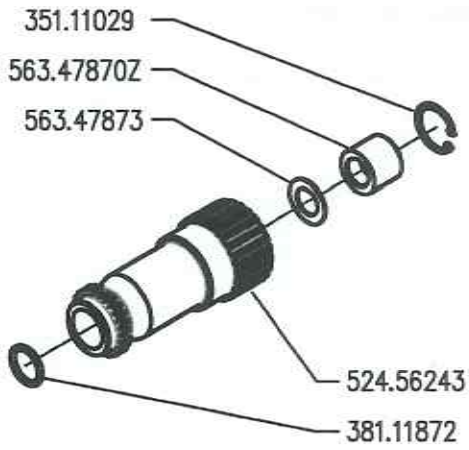

15LD500

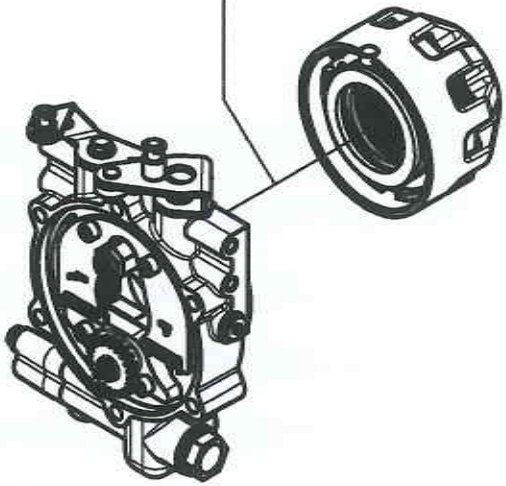

BCS

700 serie PS
PowerSafe®

MOZZI FRIZIONE POWERSAFE

POWERSAFE CLUTCH HUBS

CUBOS EMBRAGUE POWERSAFE

MOYEUX EMBRAYAGE POWERSAFE

NABEN POWERSAFE KUPPLUNG

DALLA MACCHINA
DE LA MAQUINA
DE LA MACHINA
FROM THE MACHINE
AB DER MASCHINE

N.

E01

Rev. 0

05/2009

DITE.BCS – Scala 1:6

Pos.	Code	Q.ty	Description	Notes
31100023	31100023	1	SCREW 5/16-24	
31100029	31100029	1	SCREW TSVEI 7/16-20X1 1/2 UNF8G	
31100031	31100031	1	VITE TSVEI 3/8-24X1 1/2 UNF 8G	
31152090	31152090	1	SCREW TCEI M8x80 UNI5931	
31421083	31421083	1	WASHER	
35111029	35111029	1	SEEGER RING	
38110675	38110675	1	O-RING 106 (6.75X1.78)	
38111872	38111872	1	O-RING 3075 (18,72x2,62)	
52456233	52456233	1	HUB	
52456234	52456234	1	HUB	
52456243	52456243	1	HUB	
52456245	52456245	1	HUB	
56347873	56347873	1	WASHER	
56556282	56556282	1	WASHER D.25,4	
56156288	56156288Z	1	SPECIAL WASHER SP.4	
56347870	56347870Z	1	SPECIAL NUT	

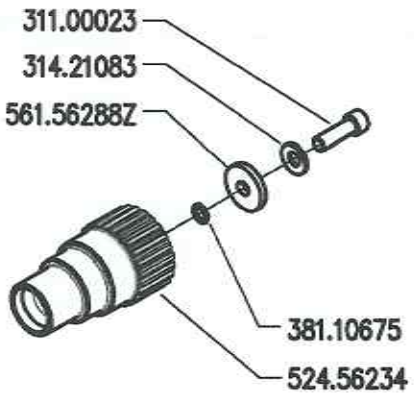

GX 160–200

GX 240–270–340–390

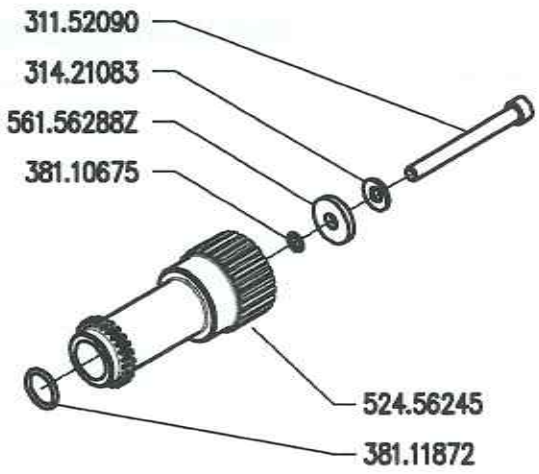

15LD350–440 – L70–100

15LD500 – 3LD510 ★

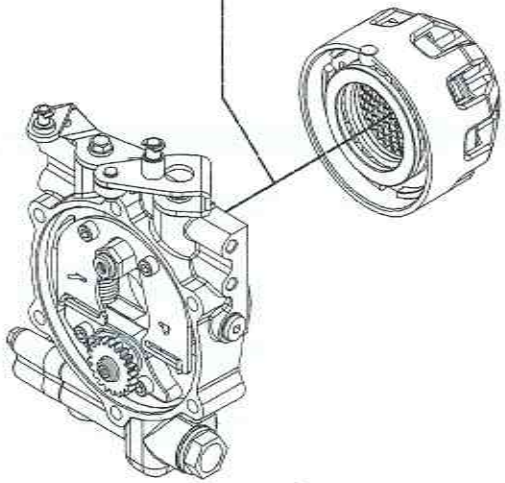

BCS

700 serie PS
PowerSafe®

MOZZI FRIZIONE POWERSAFE

POWERSAFE CLUTCH HUBS

CUBOS EMBRAGUE POWERSAFE

MOYEUX EMBRAYAGE POWERSAFE

NABEN POWERSAFE KUPPLUNG

DALLA MACCHINA
DE LA MAQUINA
DE LA MACHINA
FROM THE MACHINE
AB DER MASCHINE

★N.

AGGIORNAMENTO	
APLAZAMIENTO	
MISE A JOUR	
REVISION	
ANPASSUNG	

E01 — Rev. 1

11/2010

DITE.BCS – Scala 1:6

Pos.	Code	Q.ty	Description	Notes
31100023	31100023	1	SCREW 5/16-24	
31100029	31100029	1	SCREW TSVEI 7/16-20X1 1/2 UNF8G	
31100031	31100031	1	VITE TSVEI 3/8-24X1 1/2 UNF 8G	
31152090	31152090	1	SCREW TCEI M8x80 UNI5931	
31421083	31421083	1	WASHER	
35111029	35111029	1	SEEGER RING	
38110675	38110675	1	O-RING 106 (6.75X1.78)	
38111872	38111872	1	O-RING 3075 (18,72x2,62)	
52456233	52456233	1	HUB	
52456234	52456234	1	HUB	
52456243	52456243	1	HUB	
52456245	52456245	1	HUB	
56347873	56347873	1	WASHER	
56556282	56556282	1	WASHER D.25,4	
56156288	56156288Z	1	SPECIAL WASHER SP.4	
56347870	56347870Z	1	SPECIAL NUT	

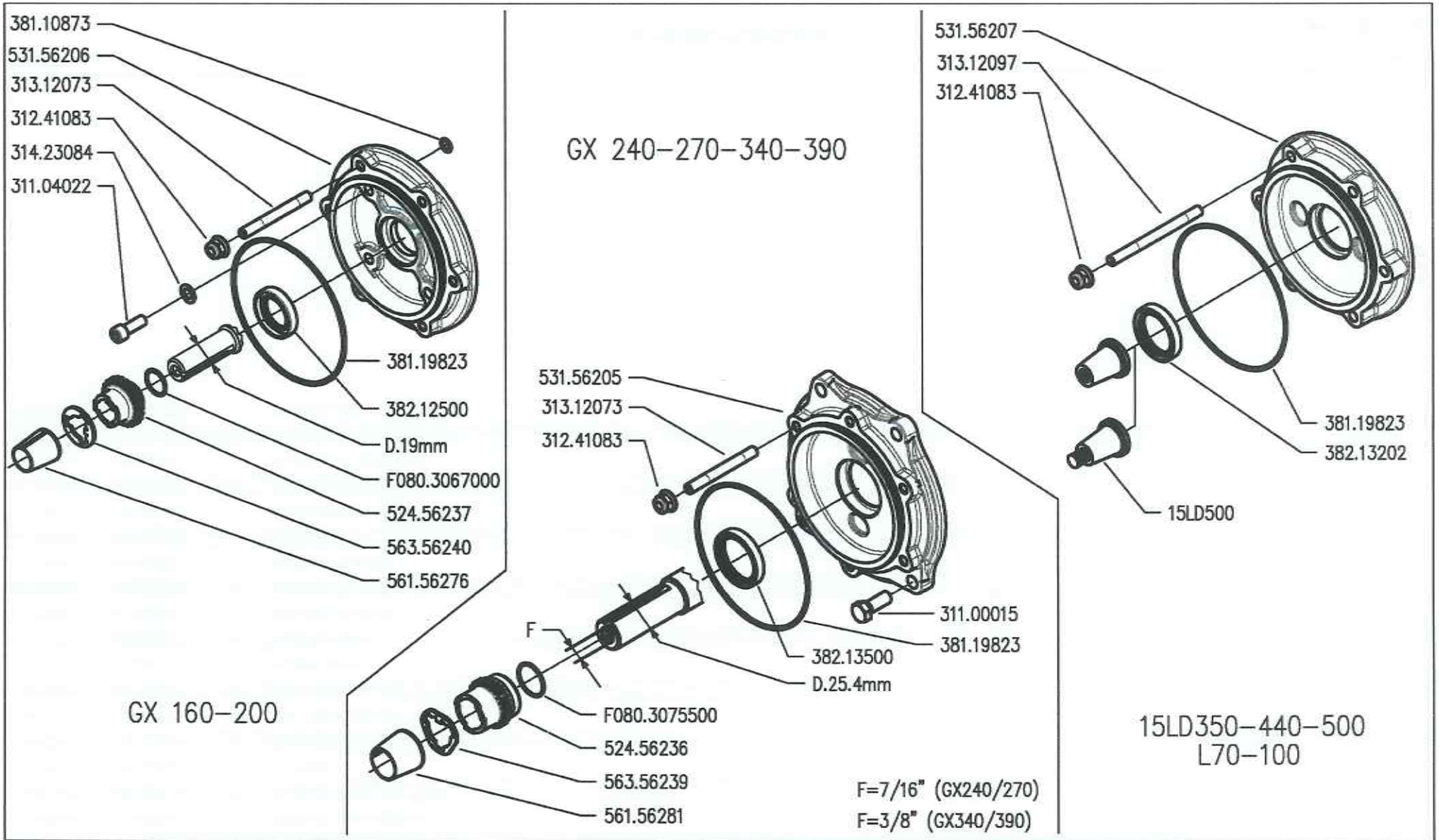

BCS

700 serie PS
PowerSafe®

FLANGIE MOTORE

ENGINE FLANGES
BRIDAS MOTOR
BRIDES MOTEUR
MOTOR FLANSCHE

DALLA MACCHINA
DE LA MAQUINA
DE LA MACHINA
FROM THE MACHINE
AB DER MASCHINE

N.

F01

Rev. 0

05/2009

DIT.BCS – Scala 1:6

Pos.	Code	Q.ty	Description	Notes
31100015	31100015	1	SCREW TE 3/8X1	
31104022	31104022	1	VITE TCEI 5/16X7/8 UNF 12K	
31241083	31241083	1	SELFLOCK NUT M8	
31312073	31312073	1	STUD BOLT	
31312097	31312097	1	STUD BOLT	
31423084	31423084	1	SPRING WASHER 8,4	
38110873	38110873	1	O-RING 108 (8,73X1,78)	
38119823	38119823	1	O-RING	
38212500	38212500	1	OIL SEAL 25X40X7	
38213202	38213202	1	OIL SEAL 32X45X7	
38213500	38213500	1	OIL SEAL 35X47X7	
52456236	52456236	1	PUMP GEAR	
52456237	52456237	1	PUMP GEAR	
53156205	53156205	1	ENGINE FLANGE	
53156206	53156206	1	ENGINE FLANGE	
53156207	53156207	1	ENGINE FLANGE	
56156276	56156276	1	SLEEVE	
56156281	56156281	1	CENTRING BUSH	
56356239	56356239	1	TRASCINATORE Q25	
56356240	56356240	1	TRASCINATORE Q19	
F0803067	F0803067000	1	O-RING 2075 (18,77X1,78)	
F0803075	F0803075500	1	O-RING 2100 (25,12X1,78)	

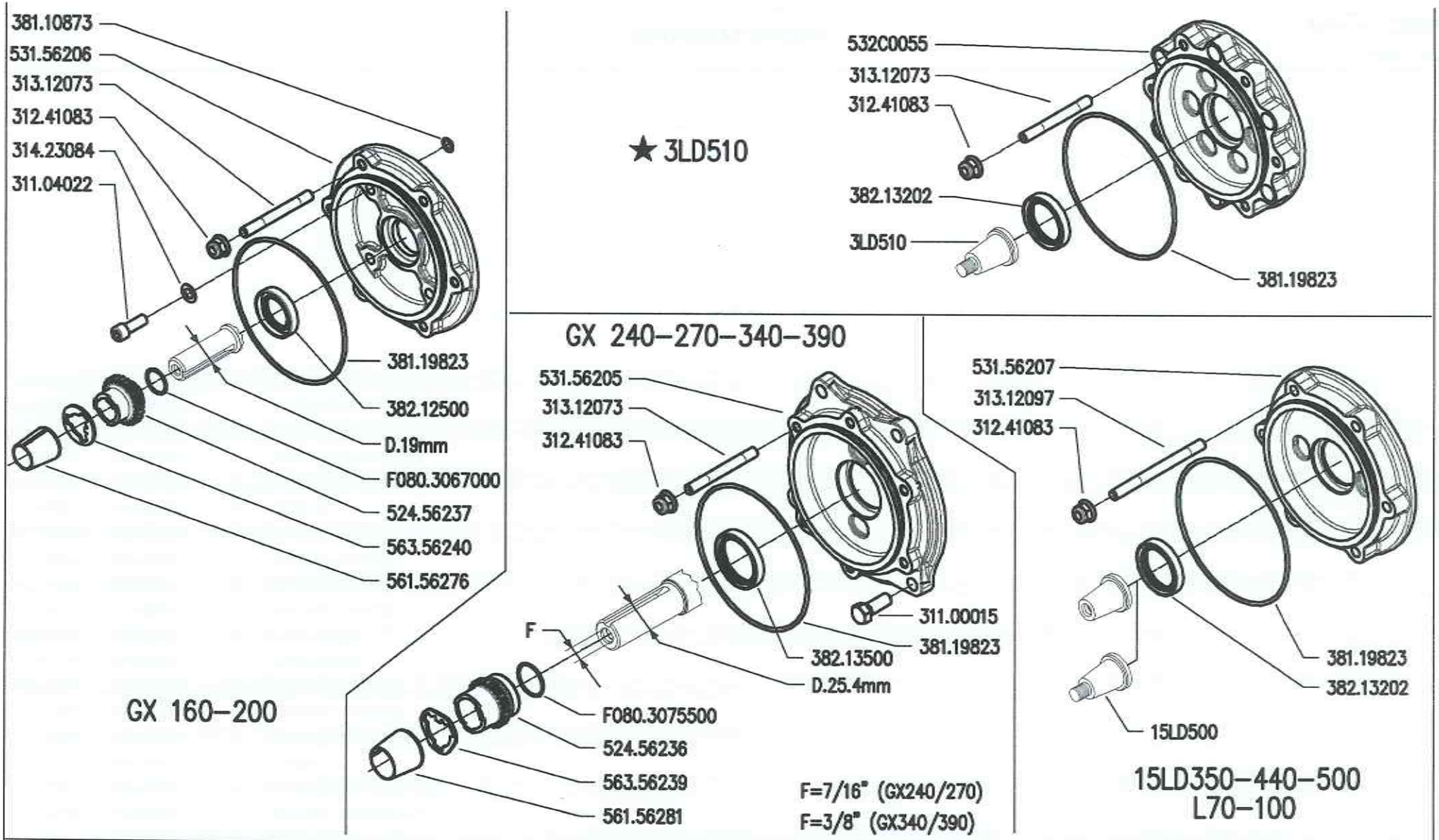

BCS

700 serie PS
PowerSafe®

FLANGIE MOTORE

ENGINE FLANGES

BRIDAS MOTOR

BRIDES MOTEUR

MOTOR FLANSCHE

DALLA MACCHINA
DE LA MAQUINA
DE LA MACHINE
FROM THE MACHINE
AB DER MASCHINE

★ N.

AGGIORNAMENTO	
APLAZAMIENTO	
MISE A JOUR	
REVISION	
ANPASSUNG	

F01 — Rev. 1

11/2010

DITE.BCS – Scala 1:6

Pos.	Code	Q.ty	Description	Notes
31100015	31100015	1	SCREW TE 3/8X1	
31104022	31104022	1	VITE TCEI 5/16X7/8 UNF 12K	
31241083	31241083	1	SELFLOCK NUT M8	
31312073	31312073	1	STUD BOLT	
31312097	31312097	1	STUD BOLT	
31423084	31423084	1	SPRING WASHER 8,4	
38110873	38110873	1	O-RING 108 (8,73X1,78)	
38119823	38119823	1	O-RING	
38212500	38212500	1	OIL SEAL 25X40X7	
38213202	38213202	1	OIL SEAL 32X45X7	
38213500	38213500	1	OIL SEAL 35X47X7	
52456236	52456236	1	PUMP GEAR	
52456237	52456237	1	PUMP GEAR	
53156205	53156205	1	ENGINE FLANGE	
53156206	53156206	1	ENGINE FLANGE	
53156207	53156207	1	ENGINE FLANGE	
532C0055	532C0055	1	FLANGIA MOTORE ACT	
56156276	56156276	1	SLEEVE	
56156281	56156281	1	CENTRING BUSH	
56356239	56356239	1	TRASCINATORE Q25	
56356240	56356240	1	TRASCINATORE Q19	
F0803067	F0803067000	1	O-RING 2075 (18,77X1,78)	
F0803075	F0803075500	1	O-RING 2100 (25,12X1,78)	

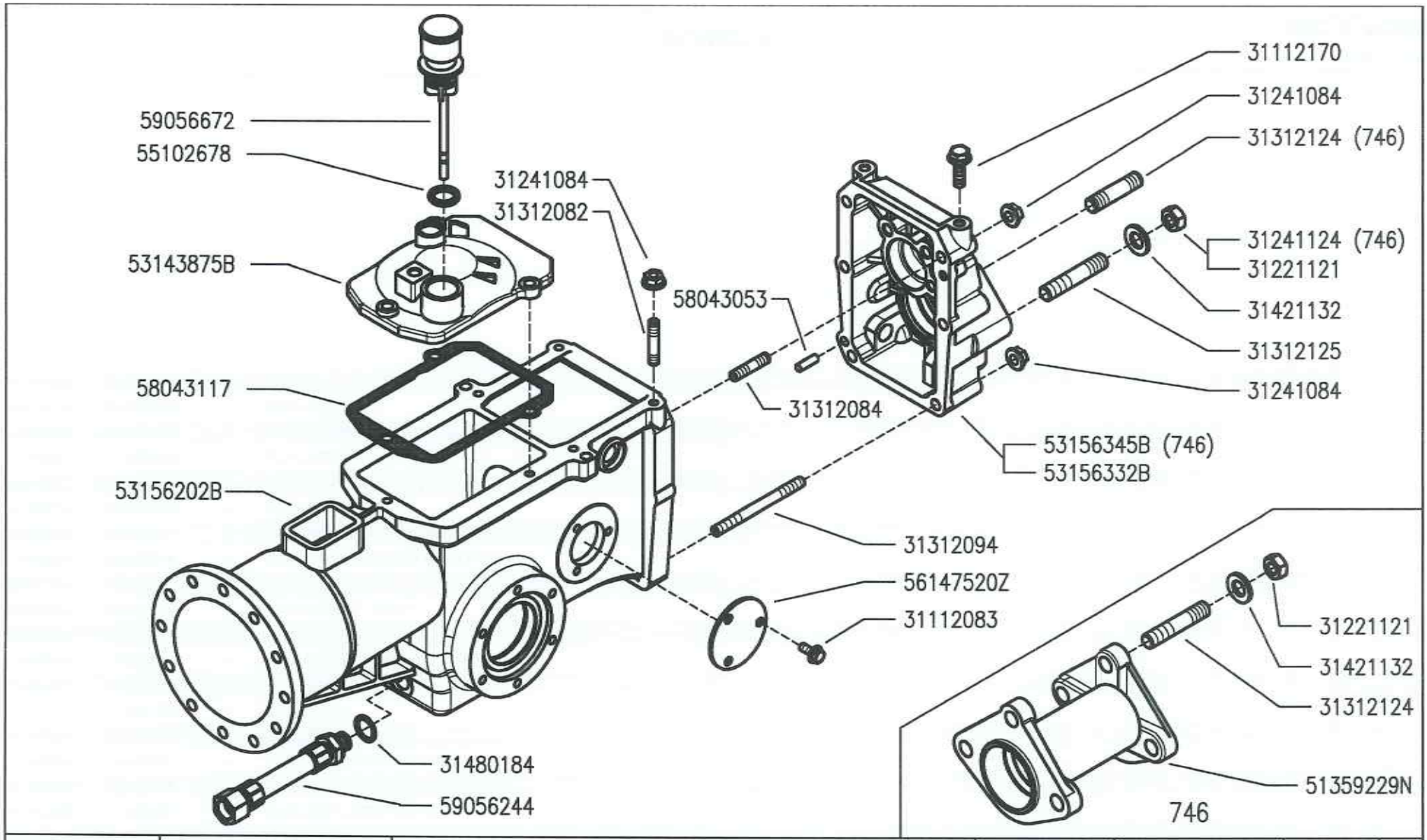

BCS	700 serie PS PowerSafe®	GEARBOX CAJA DE CAMBIO	SCATOLA CAMBIO (740–746)	BOITE DE VITESSES WECHSELGETRIEBE	DALLA MACCHINA DE LA MAQUINA DE LA MACHINA FROM THE MACHINE AB DER MASCHINE N.		G02 Rev. 0 05/2009

Pos.	Code	Q.ty	Description	Notes
31112083	31112083	1	SCREW M6X12	
31112170	31112170	1	SCREW TE C/F M8X20 DIN 6921	
31221121	31221121	1	NUT M12X1,25	
31241084	31241084	1	SELFLOCK NUT M8 6S	
31241124	31241124	1	SELFLOCK NUT M12x1,25	
31312082	31312082	1	STUD BOLT M8X38X14X20	
31312084	31312084	1	STUD BOLT M8X58X16X16	
31312094	31312094	1	STUD BOLT M8X68X14X36	
31312124	31312124	1	STUD BOLT	
31312125	31312125	1	STUD BOLT	
31421132	31421132	1	WASHER 13X24X2,8	
31480184	31480184	1	COPPER WASHER 16,7x22/1,5	
55102678	55102678	1	RUBBER RING	
58043053	58043053	1	CYLINDRICAL PLUG	
58043117	58043117	1	COVER GASKET	
59056244	59056244	1	TUBO ASPIRAZIONE LUNGO C.TO	
59056672	59056672	1	TAPPO C/ASTA LIVELLO OLIO ED	
51359229	51359229N	1	BODY	
53143875	53143875B	1	GEARBOX HOUSING COVER	
53156202	53156202B	1	BOX CASING	
53156332	53156332B	1	REAR COVER	
53156345	53156345B	1	REAR COVER	
56147520	56147520Z	1	COVER	

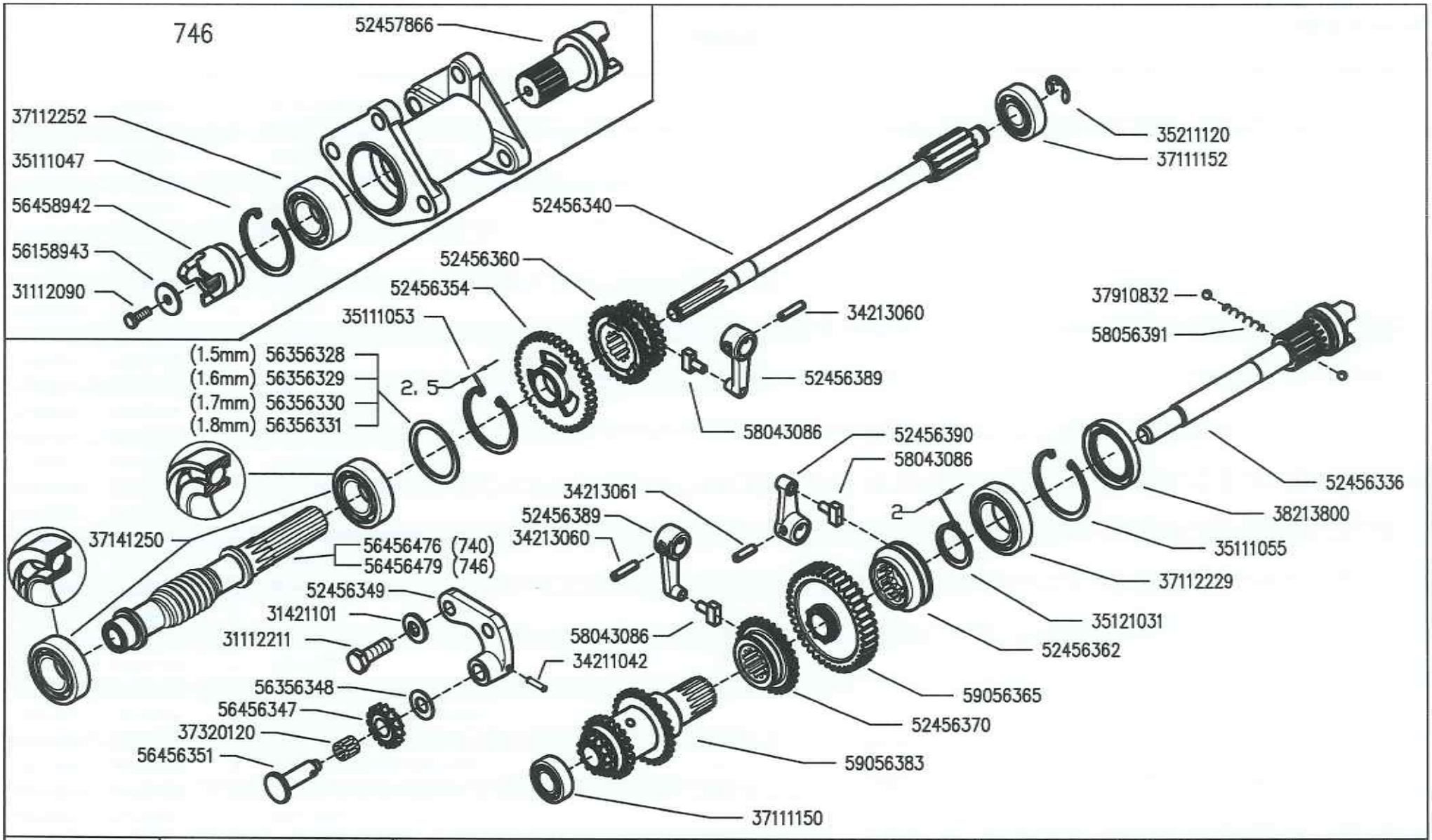

BCS	700 serie PS PowerSafe®	GEARS / ENGRANAJES	INGRANAGGI CAMBIO (740–746)	ENGRANAGES / ZAHNRÄDER	DALLA MACCHINA / DE LA MAQUINA / DE LA MACHINA / FROM THE MACHINE / AB DER MASCHINE N.	H03 Rev. 0 / 05/2009

NTF R/S – Scala 1:4

Pos.	Code	Q.ty	Description	Notes
31112090	31112090	1	SCREW TE M6X16 UNI 5739 8G	
31112211	31112211	1	SCREW TE M10X30 UNI 5739	
31421101	31421101	1	WASHER	
34211042	34211042	1	ROLL PIN	
34213060	34213060	1	ROLL PIN	
34213061	34213061	1	ROLL PIN	
35111047	35111047	1	SEEGER RING I 47 DIN 472	
35111053	35111053	1	SEEGER RING I 52 UNI 7438	
35111055	35111055	1	SEEGER RING I 55 DIN 472	
35121031	35121031	1	SEEGER RING E 30 UNI 7436	
35211120	35211120	1	SEEGER RING E 12 UNI 7434	
37111150	37111150	1	BEARING	
37111152	37111152	1	BEARING	
37112229	37112229	1	BEARING	
37112252	37112252	1	BEARING	
37141250	37141250	1	BEARING	
37320120	37320120	1	ROLLER CAGE 12X15/10	
37910832	37910832	1	BALL 1/4	
38213800	38213800	1	OIL SEAL 38X55X7	
52456336	52456336	1	PTO SHAFT	
52456340	52456340	1	SHAFT	
52456349	52456349	1	GEAR SUPPORT	
52456354	52456354	1	GEAR	
52456360	52456360	1	SLIDER	
52456362	52456362	1	COUPLING	
52456370	52456370	1	SLIDER	
52456389	52456389	1	LEVER	
52456390	52456390	1	LEVER	
52457866	52457866	1	SHAFT	
56158943	56158943	1	WASHER 7,0x25/2	
56356328	56356328	1	ADJUSTING RING SP=1,5	
56356329	56356329	1	ADJUSTING RING SP=1,6	
56356330	56356330	1	ADJUSTING RING SP=1,7	
56356331	56356331	1	ADJUSTING RING SP=1,8	

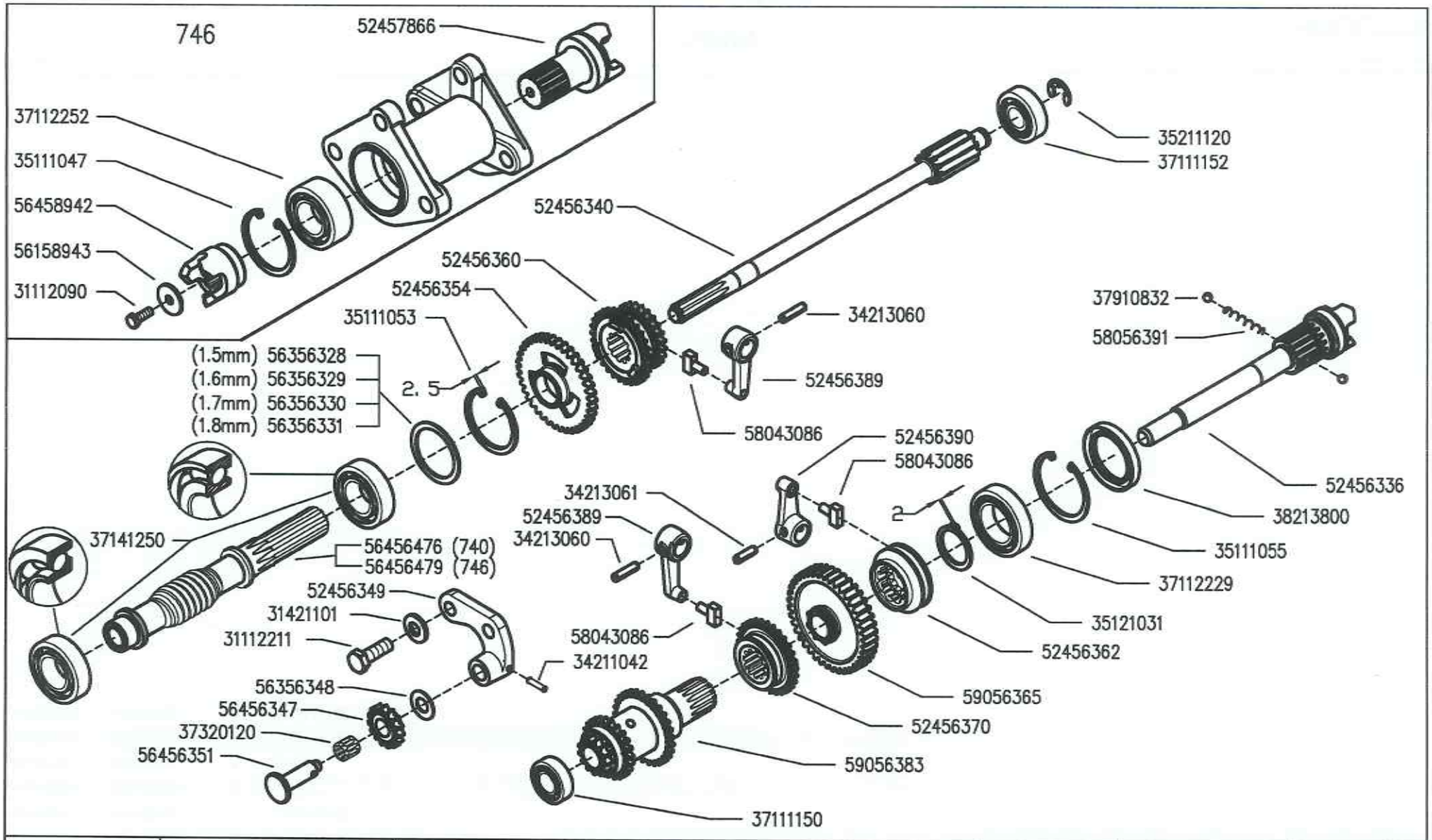

BCS	700 serie PS PowerSafe®	GEARS / ENGRANAJES	INGRANAGGI CAMBIO (740–746) / ENGRANAGES / ZAHNRÄDER	DALLA MACCHINA / DE LA MAQUINA / DE LA MACHINA / FROM THE MACHINE / AB DER MASCHINE / N.	H03	Rev. 0
					05/2009	

MTF RPS – Sviluppo 1-4

Pos.	Code	Q.ty	Description	Notes
56356348	56356348	1	ADJUSTING RING	
56456347	56456347	1	GEAR	
56456351	56456351	1	GEAR PIN	
56456476	56456476	1	SCREW	
56456479	56456479	1	SCREW	
56458942	56458942	1	COUPLING	
58043086	58043086	1	SHOE	
58056391	58056391	1	SPRING	
59056365	59056365	1	PTO GEAR	
59056383	59056383	1	TRIPLE GEAR	

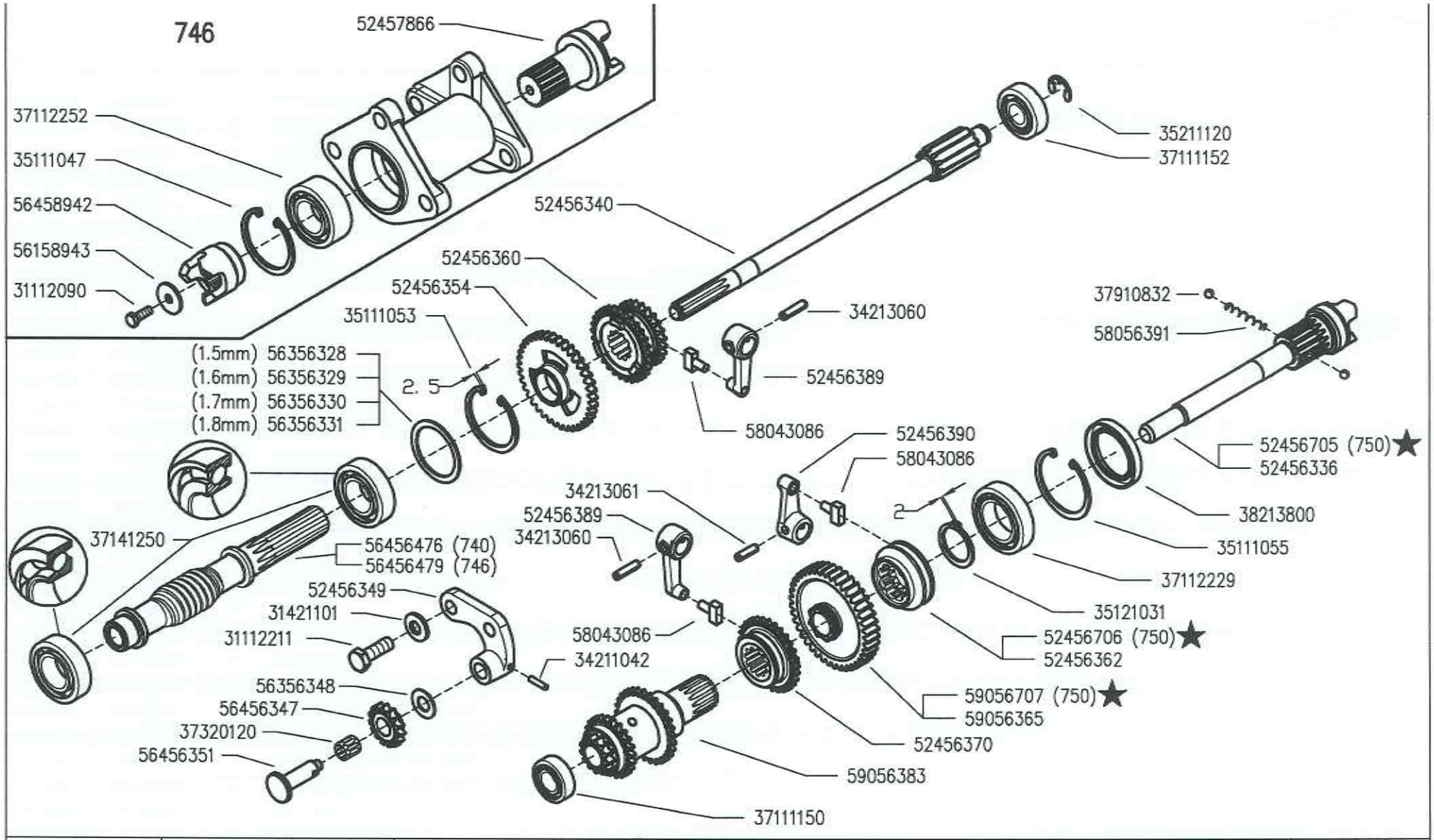

BCS	700 serie PS PowerSafe®	GEARS ENGRANAJES	INGRANAGGI CAMBIO (740–746–750★)	ENGRANAGES ZAHNRÄDER	DALLA MACCHINA DE LA MAQUINA DE LA MACHINE FROM THE MACHINE AB DER MASCHINE ★N.	AGGIORNAMENTO APLAZAMIENTO MISE A JOUR REVISION ANPASSUNG	H03 Rev. 1 11/2010

DITE.BCS – Scala 1:4

Pos.	Code	Q.ty	Description	Notes
31112090	31112090	1	SCREW TE M6X16 UNI 5739 8G	
31112211	31112211	1	SCREW TE M10X30 UNI 5739	
31421101	31421101	1	WASHER	
34211042	34211042	1	ROLL PIN	
34213060	34213060	1	ROLL PIN	
34213061	34213061	1	ROLL PIN	
35111047	35111047	1	SEEGER RING I 47 DIN 472	
35111053	35111053	1	SEEGER RING I 52 UNI 7438	
35111055	35111055	1	SEEGER RING I 55 DIN 472	
35121031	35121031	1	SEEGER RING E 30 UNI 7436	
35211120	35211120	1	SEEGER RING E 12 UNI 7434	
37111150	37111150	1	BEARING	
37111152	37111152	1	BEARING	
37112229	37112229	1	BEARING	
37112252	37112252	1	BEARING	
37141250	37141250	1	BEARING	
37320120	37320120	1	ROLLER CAGE 12X15/10	
37910832	37910832	1	BALL 1/4	
38213800	38213800	1	OIL SEAL 38X55X7	
52456336	52456336	1	PTO SHAFT	
52456340	52456340	1	SHAFT	
52456349	52456349	1	GEAR SUPPORT	
52456354	52456354	1	GEAR	
52456360	52456360	1	SLIDER	
52456362	52456362	1	COUPLING	
52456370	52456370	1	SLIDER	
52456389	52456389	1	LEVER	
52456390	52456390	1	LEVER	
52456705	52456705	1	PTO SHAFT	
52456706	52456706	1	PTO COUPLING	
52457866	52457866	1	SHAFT	
56158943	56158943	1	WASHER 7,0x25/2	
56356328	56356328	1	ADJUSTING RING SP=1,5	
56356329	56356329	1	ADJUSTING RING SP=1,6	

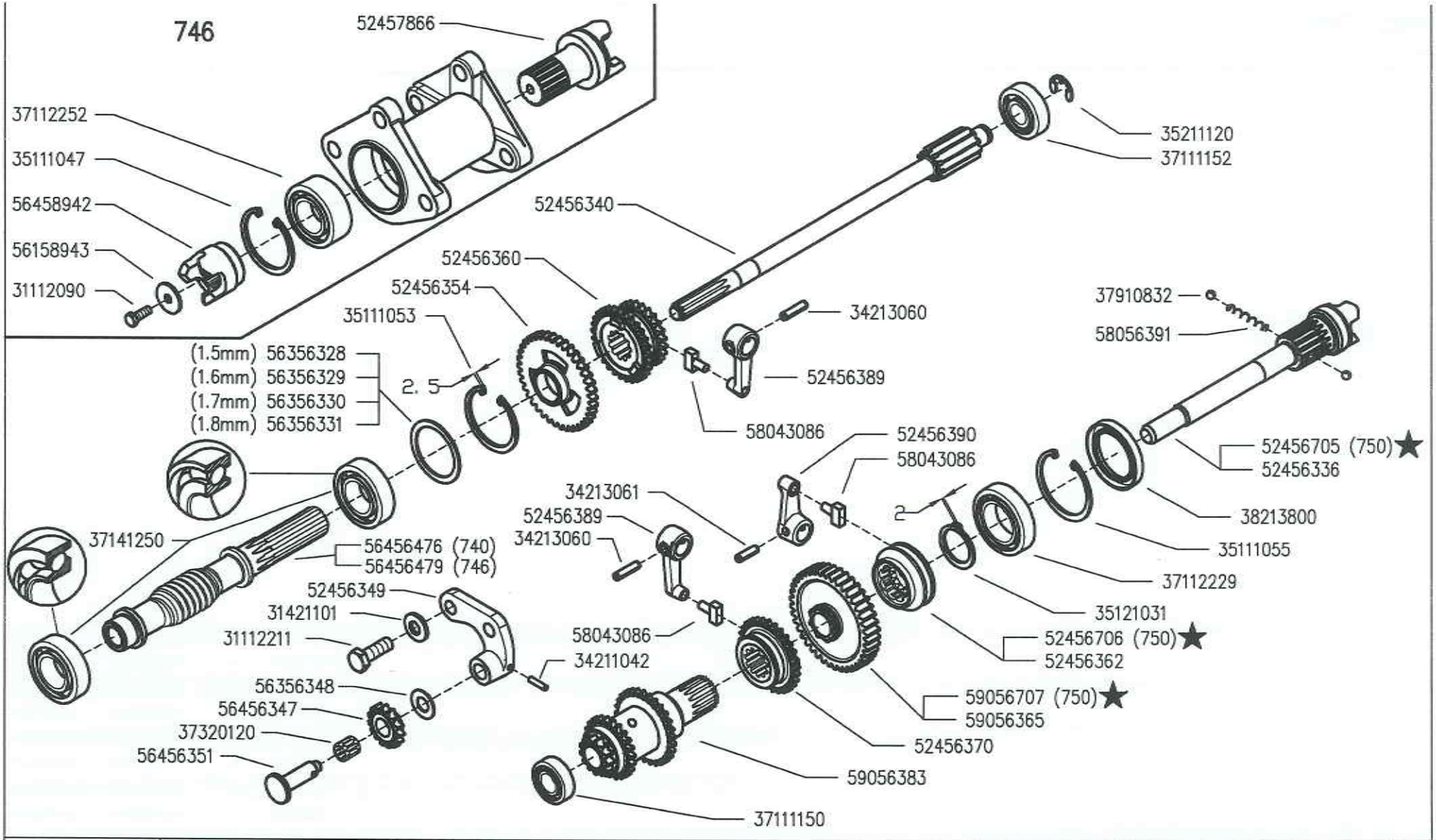

BCS	700 serie PS PowerSafe®	GEARS / ENGRANAJES	INGRANAGGI CAMBIO (740–746–750★)	ENGRANAGES / ZAHNRÄDER	DALLA MACCHINA / DE LA MAQUINA / DE LA MACHINE / FROM THE MACHINE / AB DER MASCHINE ★N.	AGGIORNAMENTO / APLAZAMIENTO / MISE A JOUR / REVISION / ANPASSUNG	H03 Rev. 1 11/2010

DITE.BCS - Scala 1:4

Pos.	Code	Q.ty	Description	Notes
56356330	56356330	1	ADJUSTING RING SP=1,7	
56356331	56356331	1	ADJUSTING RING SP=1,8	
56356348	56356348	1	ADJUSTING RING	
56456347	56456347	1	GEAR	
56456351	56456351	1	GEAR PIN	
56456476	56456476	1	SCREW	
56456479	56456479	1	SCREW	
56458942	56458942	1	COUPLING	
58043086	58043086	1	SHOE	
58056391	58056391	1	SPRING	
59056365	59056365	1	PTO GEAR	
59056383	59056383	1	TRIPLE GEAR	
59056707	59056707	1	PTO GEAR	

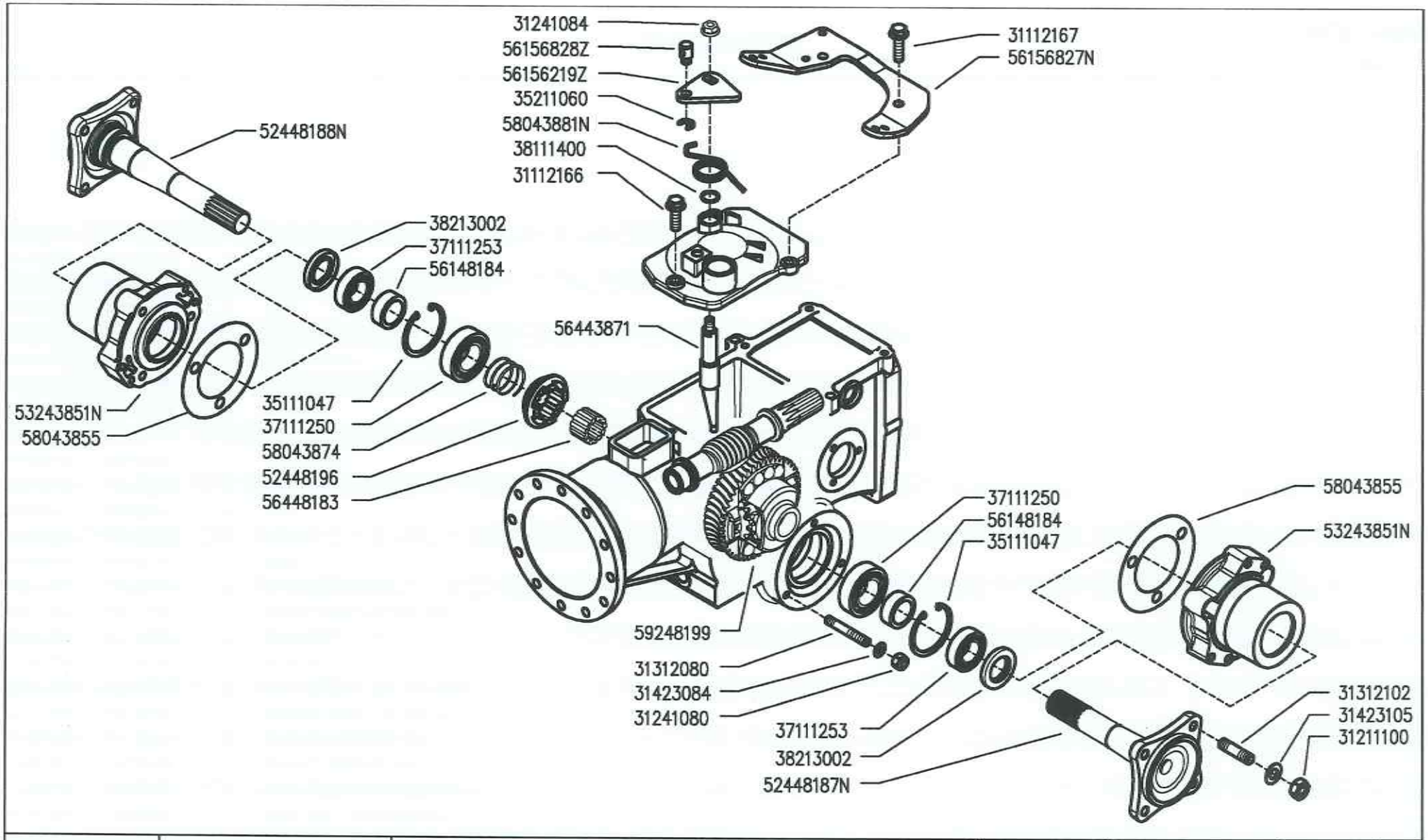

BCS	700 serie PS PowerSafe®	WHEELS AXLE EJE RUEDAS	ASSE RUOTE (740)	ESSIEUS ROUES RÄDACHSE	DALLA MACCHINA DE LA MAQUINA DE LA MACHINA FROM THE MACHINE AB DER MASCHINE N.	I03	Rev. 0
						05/2009	

Pos.	Code	Q.ty	Description	Notes
31112166	31112166	1	SCREW TE C/F M8X25 DIN 6921 8G	
31112167	31112167	1	SCREW TE C/F M8X30 DIN 6921 8G	
31211100	31211100	1	NUT M10	
31241080	31241080	1	SELFLOCK NUT M8	
31241084	31241084	1	SELFLOCK NUT M8 6S	
31312080	31312080	1	STUD BOLT M8X46X20X12	
31312102	31312102	1	STUD BOLT M10X40X24X12	
31423084	31423084	1	SPRING WASHER 8,4	
31423105	31423105	1	SPRING WASHER 10,5	
35111047	35111047	1	SEEGER RING I 47 DIN 472	
35211060	35211060	1	SEEGER RING E 6 UNI 7434	
37111250	37111250	1	BEARING	
37111253	37111253	1	BEARING	
38111400	38111400	1	O-RING 2056 (14,00X1,78)	
38213002	38213002	1	OIL SEAL 30X40X7	
56148184	56148184	1	RING	
56156827	56156827	1	STOP	
56443871	56443871	1	ROD	
56448183	56448183	1	SPACER	
56448196	56448196	1	COUPLING	
58043855	58043855	1	GASKET	
58043874	58043874	1	SPRING	
59048199	59048199	1	DIFFERENTIAL GEAR	
52448187	52448187N	1	AXLE SHAFT	
52448188	52448188N	1	AXLE SHAFT	
53243851	53243851N	1	HUB	
56156219	56156219Z	1	LEVER	
56156828	56156828Z	1	STOP	
58043881	58043881N	1	SPRING	

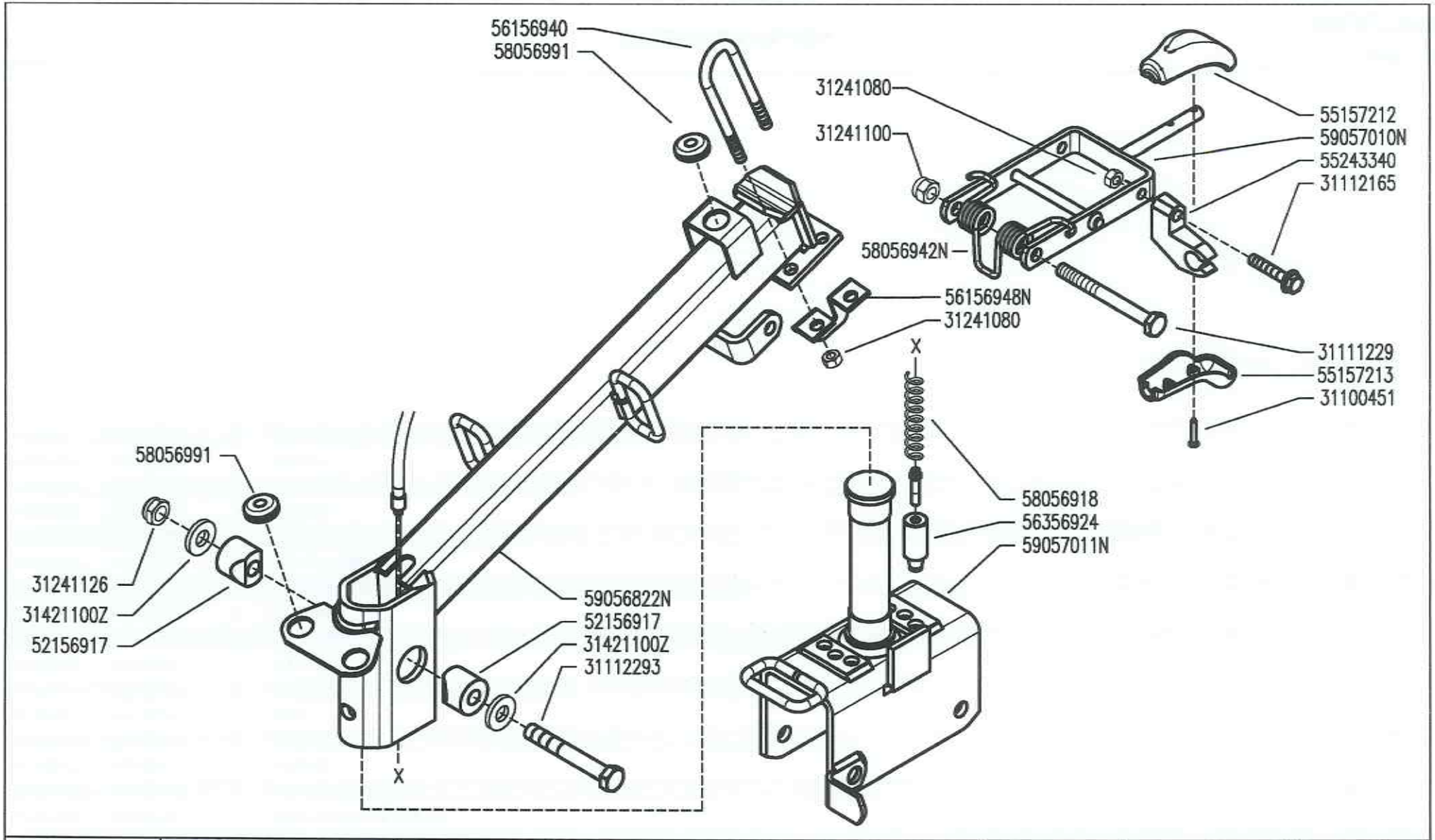

BCS	700 serie PS PowerSafe®	STEERING COLUMN COLUMNA	PIANTONE (740–746)	PLANTON LENKSÄULE	DALLA MACCHINA DE LA MAQUINA DE LA MACHINA FROM THE MACHINE AB DER MASCHINE N.	J03 Rev. 0 05/2009

DITE.BCS – Scala 1:4

Pos.	Code	Q.ty	Description	Notes
31100451	31100451	1	SCREW 3,5X25	
31111229	31111229	1	SCREW TE M10X110 UNI 5737 8G	
31112165	31112165	1	SCREW TE C/F M8X35 DIN 6921 8G	
31112293	31112293	1	SCREW TE M12X80 UNI 5737	
31241080	31241080	1	SELFLOCK NUT M8	
31241100	31241100	1	SELFLOCK NUT M10 6S	
31241126	31241126	1	SELFLOCK NUT M12	
52156917	52156917	1	WEDGE	
55157212	55157212	1	GRIP	
55157213	55157213	1	GRIP	
55243340	55243340	1	SUPPORT	
56156940	56156940	1	U BOLT	
56356924	56356924	1	FERRULE	
58056918	58056918	1	SPRING	
58056991	58056991	1	CABLE GLAND	
31421100	31421100Z	1	CUP SPRING	
56156948	56156948N	1	STOP	
58056942	58056942N	1	SPRING	
59056822	59056822N	1	COLUMN	
59057010	59057010N	1	LEVER	
59057011	59057011N	1	CONNECTION	

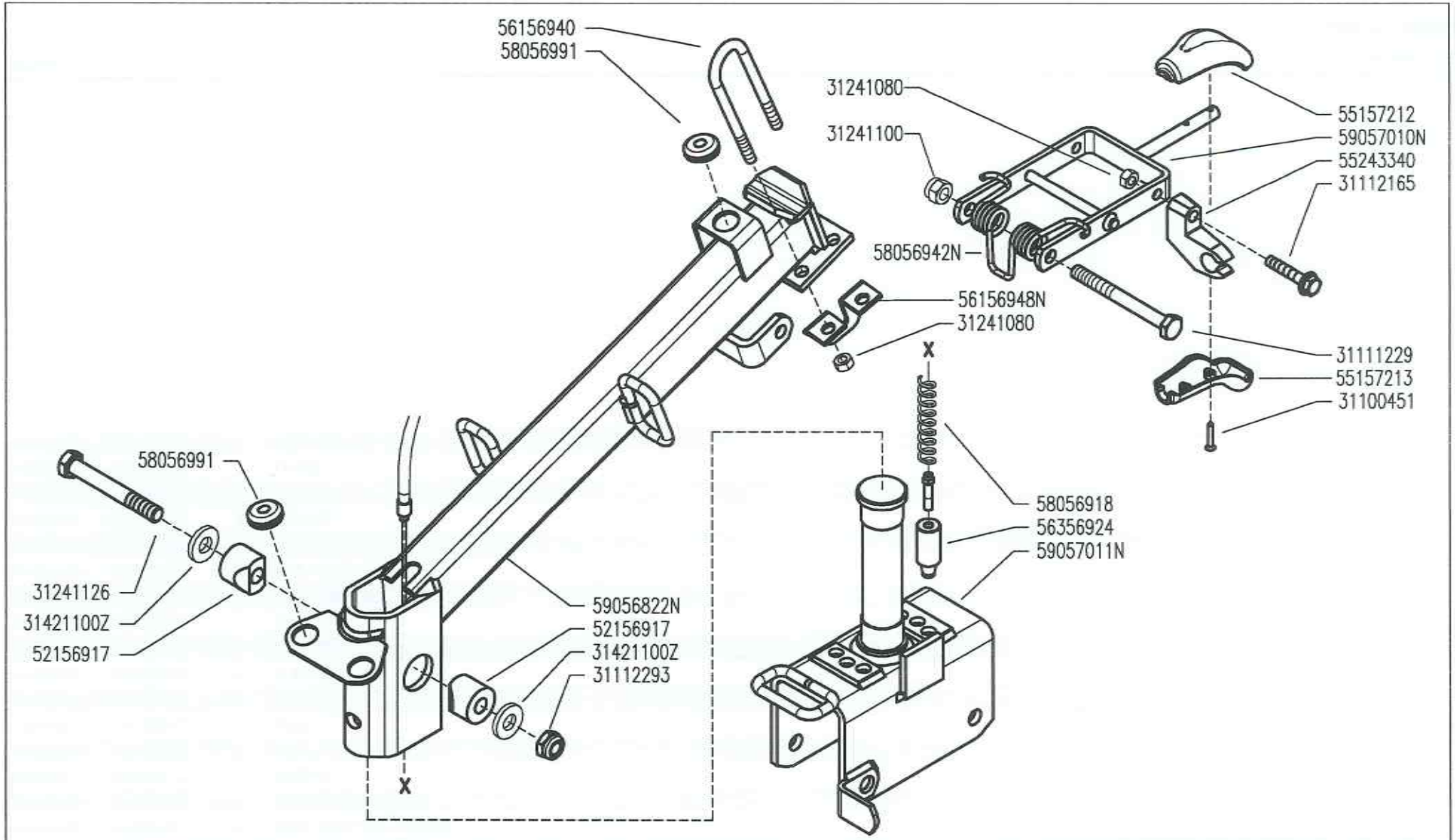

BCS

700 serie PS
PowerSafe®

STEERING COLUMN
COLUMNA

PIANTONE
(740-746-750 ★)

PLANTON
LENKSÄULE

DALLA MACCHINA
DE LA MAQUINA
DE LA MACHINA
FROM THE MACHINE
AB DER MASCHINE
★ N.

AGGIORNAMENTO
APLAZAMIENTO
MISE A JOUR
REVISION
ANPASSUNG

J03

Rev. 1

11/2010

DITE.BCS - Scala 1:4

Pos.	Code	Q.ty	Description	Notes
31100451	31100451	1	SCREW 3,5X25	
31111229	31111229	1	SCREW TE M10X110 UNI 5737 8G	
31112165	31112165	1	SCREW TE C/F M8X35 DIN 6921 8G	
31112293	31112293	1	SCREW TE M12X80 UNI 5737	
31241080	31241080	1	SELFLOCK NUT M8	
31241100	31241100	1	SELFLOCK NUT M10 6S	
31241126	31241126	1	SELFLOCK NUT M12	
52156917	52156917	1	WEDGE	
55157212	55157212	1	GRIP	
55157213	55157213	1	GRIP	
55243340	55243340	1	SUPPORT	
56156940	56156940	1	U BOLT	
56356924	56356924	1	FERRULE	
58056918	58056918	1	SPRING	
58056991	58056991	1	CABLE GLAND	
31421100	31421100Z	1	CUP SPRING	
56156948	56156948N	1	STOP	
58056942	58056942N	1	SPRING	
59056822	59056822N	1	COLUMN	
59057010	59057010N	1	LEVER	
59057011	59057011N	1	CONNECTION	

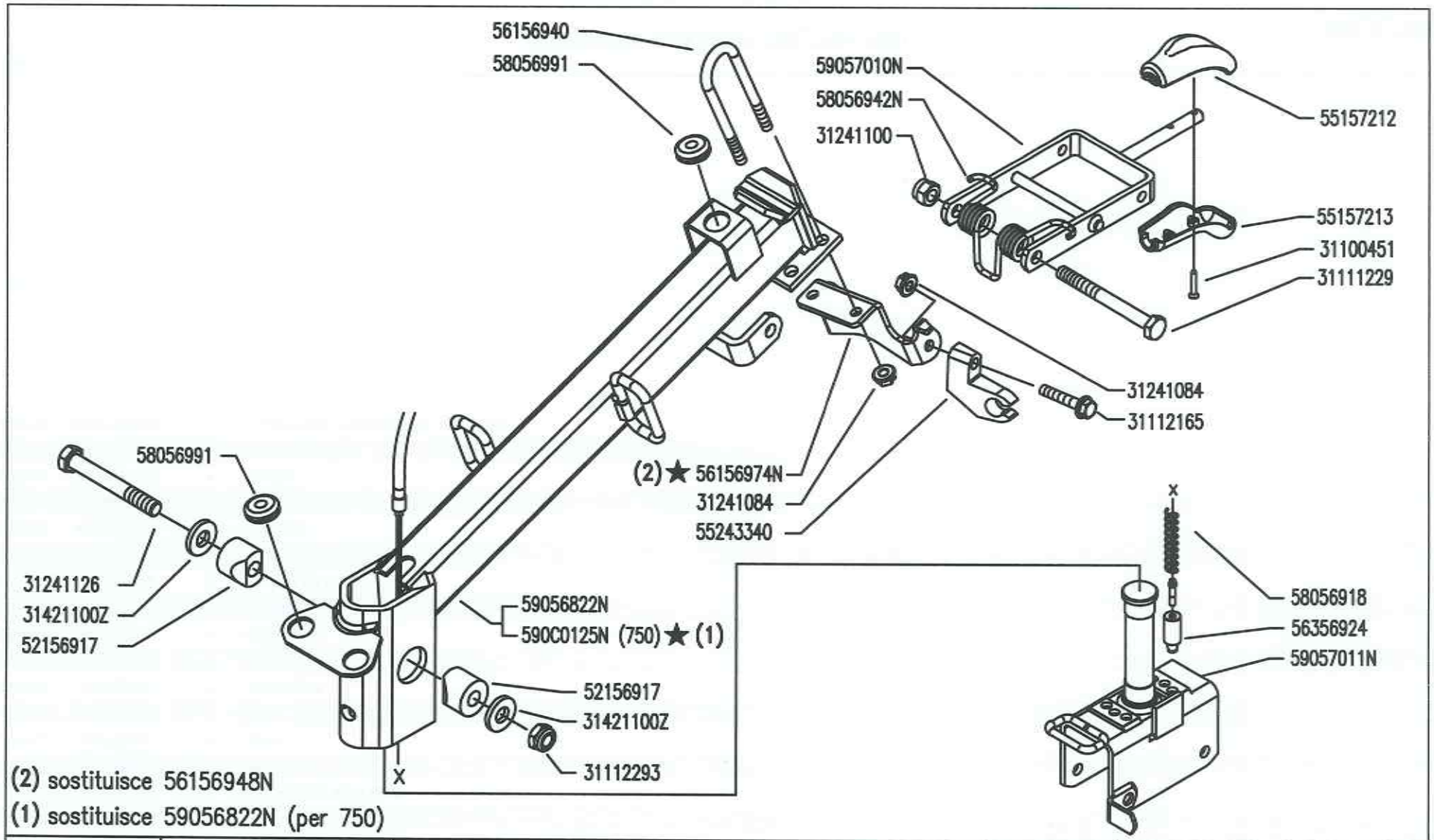

(2) sostituisce 56156948N

(1) sostituisce 59056822N (per 750)

BCS	700 serie PS PowerSafe®	STEERING COLUMN COLUMNA	PIANTONE (740-746-750)	PLANTON LENKSÄULE	DALLA MACCHINA DE LA MAQUINA DE LA MACHINA FROM THE MACHINE AB DER MASCHINE ★ N.	901936	J03 Rev. 2 01/2012

Pos.	Code	Q.ty	Description	Notes
56156974	56156974N		SUPPORTO FISSO ASTE MC	Sostituisce 56156948N
31100451	31100451	1	SCREW 3,5X25	
31111229	31111229	1	SCREW TE M10X110 UNI 5737 8G	
31112165	31112165	1	SCREW TE C/F M8X35 DIN 6921 8G	
31112293	31112293	1	SCREW TE M12X80 UNI 5737	
31241080	31241080	1	SELFLOCK NUT M8	
31241100	31241100	1	SELFLOCK NUT M10 6S	
31241126	31241126	1	SELFLOCK NUT M12	
52156917	52156917	1	WEDGE	
55157212	55157212	1	GRIP	
55157213	55157213	1	GRIP	
55243340	55243340	1	SUPPORT	
56156940	56156940	1	U BOLT	
56356924	56356924	1	FERRULE	
58056918	58056918	1	SPRING	
58056991	58056991	1	CABLE GLAND	
31421100	31421100Z	1	CUP SPRING	
58056942	58056942N	1	SPRING	
59056822	59056822N	1	COLUMN	
59057010	59057010N	1	LEVER	
59057011	59057011N	1	CONNECTION	
590C0125	590C0125N	1	PIANTONE POWERSAFE 750 C.TO	

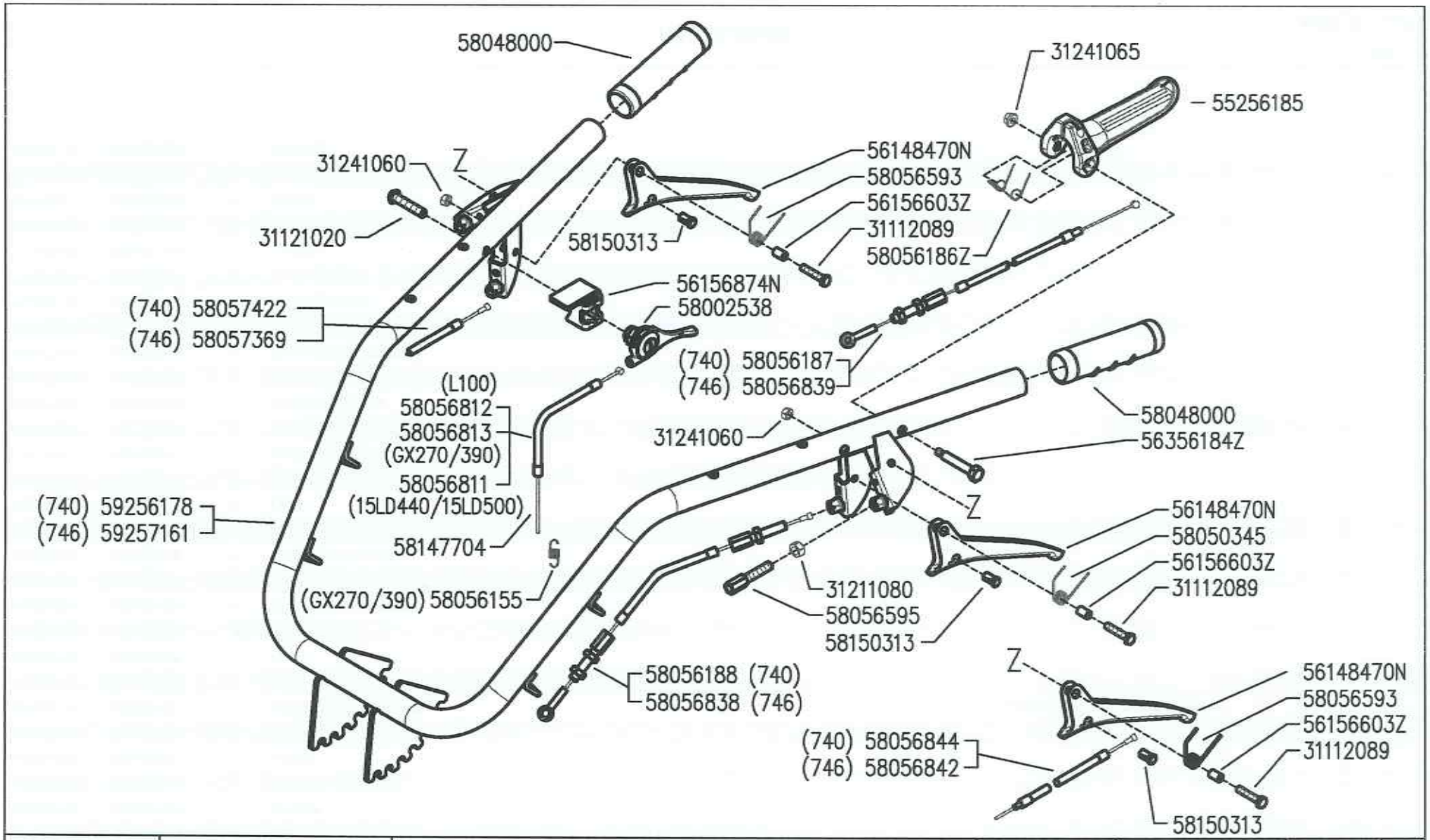

BCS	700 serie PS PowerSafe®	HANDLEBAR / MANILLAR	MANUBRIO (740–746)	MANCHERON / LINCHER	DALLA MACCHINA / DE LA MAQUINA / DE LA MACHINA / FROM THE MACHINE / AB DER MASCHINE N.	K03 Rev. 0 / 05/2009

DITE.BCS – Scala 1:5

Pos.	Code	Q.ty	Description	Notes
31112089	31112089	1	SCREW TE M6X25 UNI 5739 8G	
31121020	31121020	1	VITE TBCEI M8X40 ISO7380 10K	
31211080	31211080	1	NUT M8	
31241060	31241060	1	SELFLOCK NUT M6	
31241065	31241065	1	SELFLOCK NUT M6	
55256185	55256185	1	LEVER	
58002538	58002538	1	COMMAND LEVER	
58048000	58048000	1	KNOB	
58050345	58050345	1	SPRING	
58056155	58056155	1	RESTORING SPRING	Utilizzato con motore GX270
58056187	58056187	1	LINE	
58056188	58056188	1	LINE	
58056593	58056593	1	SPRING	
58056595	58056595	1	ADJUSTING SCREW	
58056811	58056811	1	LINE AND SHEATH	
58056812	58056812	1	LINE AND SHEATH	
58056813	58056813	1	LINE AND SHEATH	
58056838	58056838	1	LINE	
58056839	58056839	1	LINE	
58056842	58056842	1	LINE AND SHEATH	
58056844	58056844	1	LINE AND SHEATH	
58057369	58057369	1	TRANSMISSION	
58057422	58057422	1	TRASM.SBLOCC.PIANTONE MC740/08	
58147704	58147704	1	ADJUSTING SCREW	
58150313	58150313	1	CABLE CLAMP	
59256178	59256178	1	HANDLE BAR	
59257161	59257161	1	HANDLE BAR	
56148470	56148470N	1	LEVER	
56156603	56156603Z	1	SPACER	
56156874	56156874N	1	PANEL	
56356184	56356184Z	1	LEVER PIN	
58056186	58056186Z	1	SPRING	

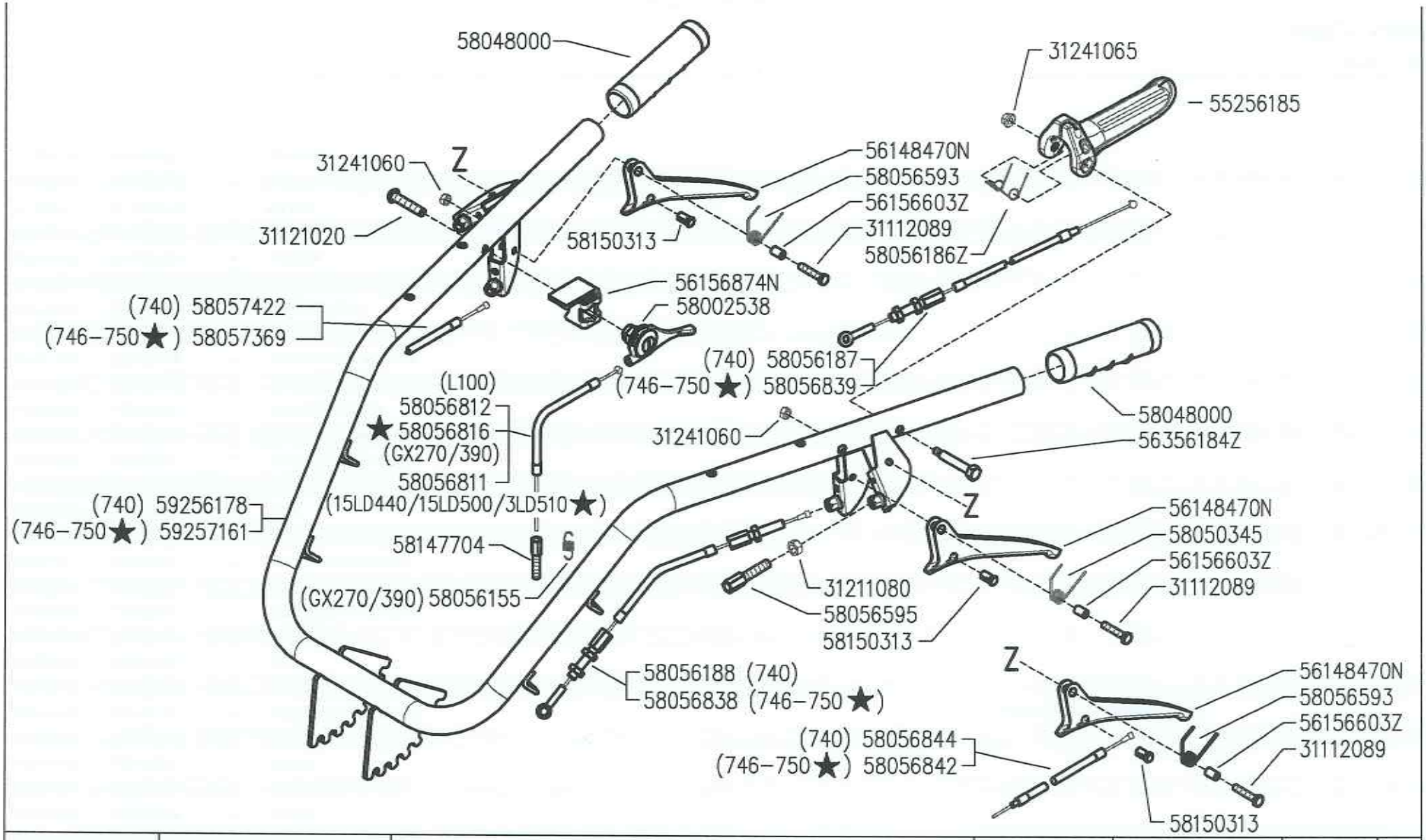

BCS	700 serie PS PowerSafe®	HANDLEBAR MANILLAR	MANUBRIO (740-746-750★)	MANCHERON LINCHER	DALLA MACCHINA DE LA MAQUINA DE LA MACHINA FROM THE MACHINE AB DER MASCHINE ★N.	AGGIORNAMENTO APLAZAMIENTO MISE A JOUR REVISION ANPASSUNG	K03 Rev. 1 11/2010

DITE.BCS - Scala 1:5

Pos.	Code	Q.ty	Description	Notes
31112089	31112089	1	SCREW TE M6X25 UNI 5739 8G	
31121020	31121020	1	VITE TBCEI M8X40 ISO7380 10K	
31211080	31211080	1	NUT M8	
31241060	31241060	1	SELFLOCK NUT M6	
31241065	31241065	1	SELFLOCK NUT M6	
55256185	55256185	1	LEVER	
58002538	58002538	1	COMMAND LEVER	
58048000	58048000	1	KNOB	
58050345	58050345	1	SPRING	
58056155	58056155	1	RESTORING SPRING	Utilizzato con motore GX270
58056187	58056187	1	LINE	
58056188	58056188	1	LINE	
58056593	58056593	1	SPRING	
58056595	58056595	1	ADJUSTING SCREW	
58056811	58056811	1	LINE AND SHEATH	
58056812	58056812	1	LINE AND SHEATH	
58056816	58056816	1	LINE AND SHEATH	
58056838	58056838	1	LINE	
58056839	58056839	1	LINE	
58056842	58056842	1	LINE AND SHEATH	
58056844	58056844	1	LINE AND SHEATH	
58057369	58057369	1	TRANSMISSION	
58057422	58057422	1	TRASM.SBLOCC.PIANTONE MC740/08	
58147704	58147704	1	ADJUSTING SCREW	
58150313	58150313	1	CABLE CLAMP	
59256178	59256178	1	HANDLE BAR	
59257161	59257161	1	HANDLE BAR	
56148470	56148470N	1	LEVER	
56156603	56156603Z	1	SPACER	
56156874	56156874N	1	PANEL	
56356184	56356184Z	1	LEVER PIN	
58056186	58056186Z	1	SPRING	

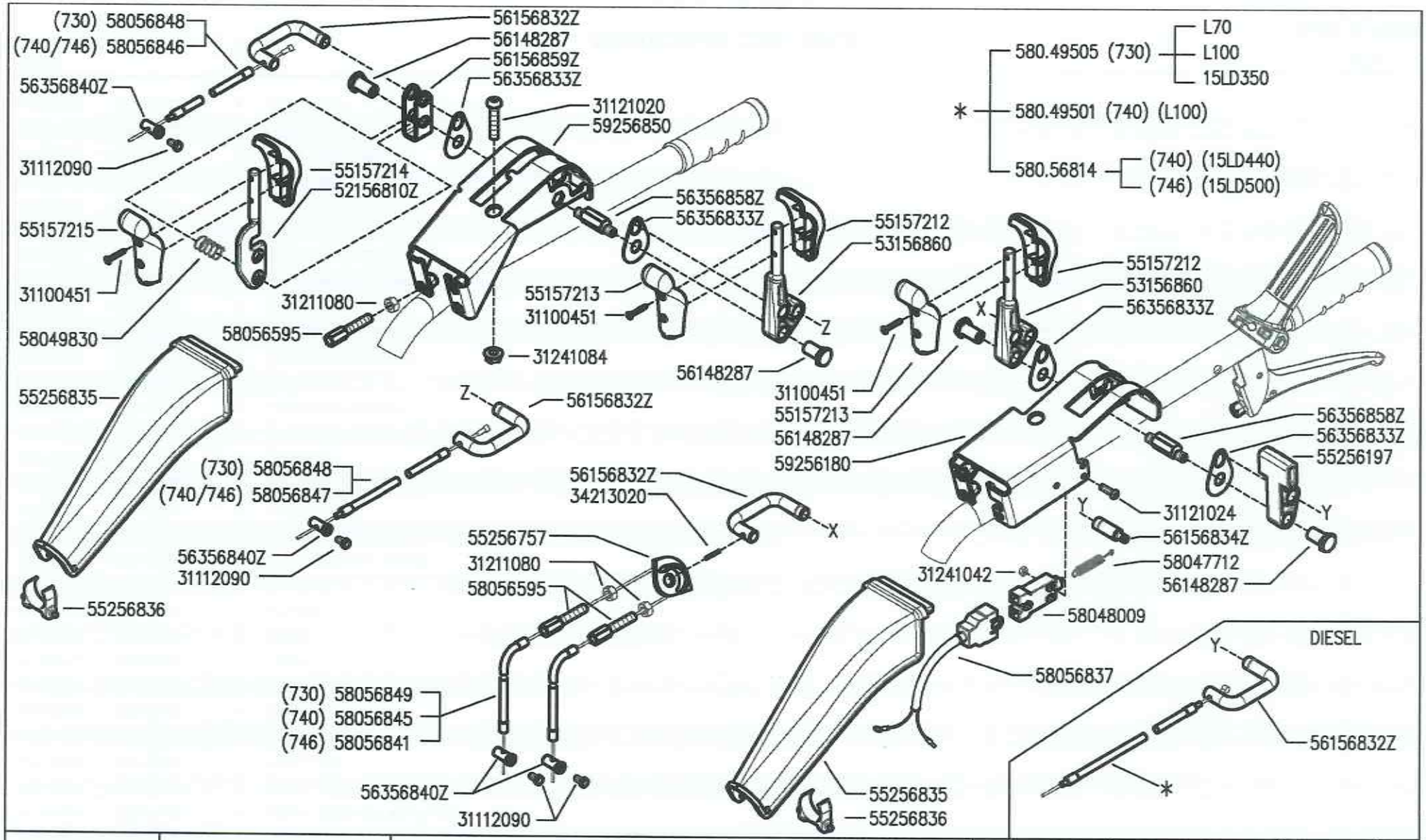

BCS	700 serie PS PowerSafe®	COMANDI SUL MANUBRIO (730–740–746) HANDLEBAR CONTROLS CONTROLES EN EL MANILLAR CONTROLES SUR LE MANCHERON KONTROLLEN AM LINCHER	DALLA MACCHINA DE LA MAQUINA DE LA MACHINA FROM THE MACHINE AB DER MASCHINE N.	L03	Rev. 0
				05/2009	DIE.BCS – Scala 1:5

Pos.	Code	Q.ty	Description	Notes
31100451	31100451	1	SCREW 3,5X25	
31112090	31112090	1	SCREW TE M6X16 UNI 5739 8G	
31121020	31121020	1	VITE TBCEI M8X40 ISO7380 10K	
31121024	31121024	1	SCREW TBCEI FL.M4X25	
31211080	31211080	1	NUT M8	
31241042	31241042	1	SELFLOCK NUT M4 FL.6S	
31241084	31241084	1	SELFLOCK NUT M8 6S	
34213020	34213020	1	ROLL PIN	
53156860	53156860	1	COMMAND LEVER	
55157212	55157212	1	GRIP	
55157213	55157213	1	GRIP	
55157214	55157214	1	GRIP	
55157215	55157215	1	GRIP	
55256197	55256197	1	LEVER	
55256757	55256757	1	PULLEY	
55256835	55256835	1	PROTECTION COVER	
55256836	55256836	1	CROSS MEMBER	
56148287	56148287	1	STUD BOLT	
58047712	58047712	1	SPRING	
58048009	58048009	1	SWITCH	
58049501	58049501	1	LINE AND SHEATH	
58049505	58049505	1	LINE AND SHEATH	
58049830	58049830	1	SPRING	
58056595	58056595	1	ADJUSTING SCREW	
58056814	58056814	1	LINE AND SHEATH	
58056837	58056837	1	WIRING	
58056841	58056841	1	LINE AND SHEATH	
58056845	58056845	1	LINE AND SHEATH	
58056846	58056846	1	LINE AND SHEATH	
58056847	58056847	1	LINE AND SHEATH	
58056848	58056848	1	LINE AND SHEATH	
58056849	58056849	1	LINE AND SHEATH	
59256180	59256180	1	SUPPORT	
59256850	59256850	1	SUPPORT	

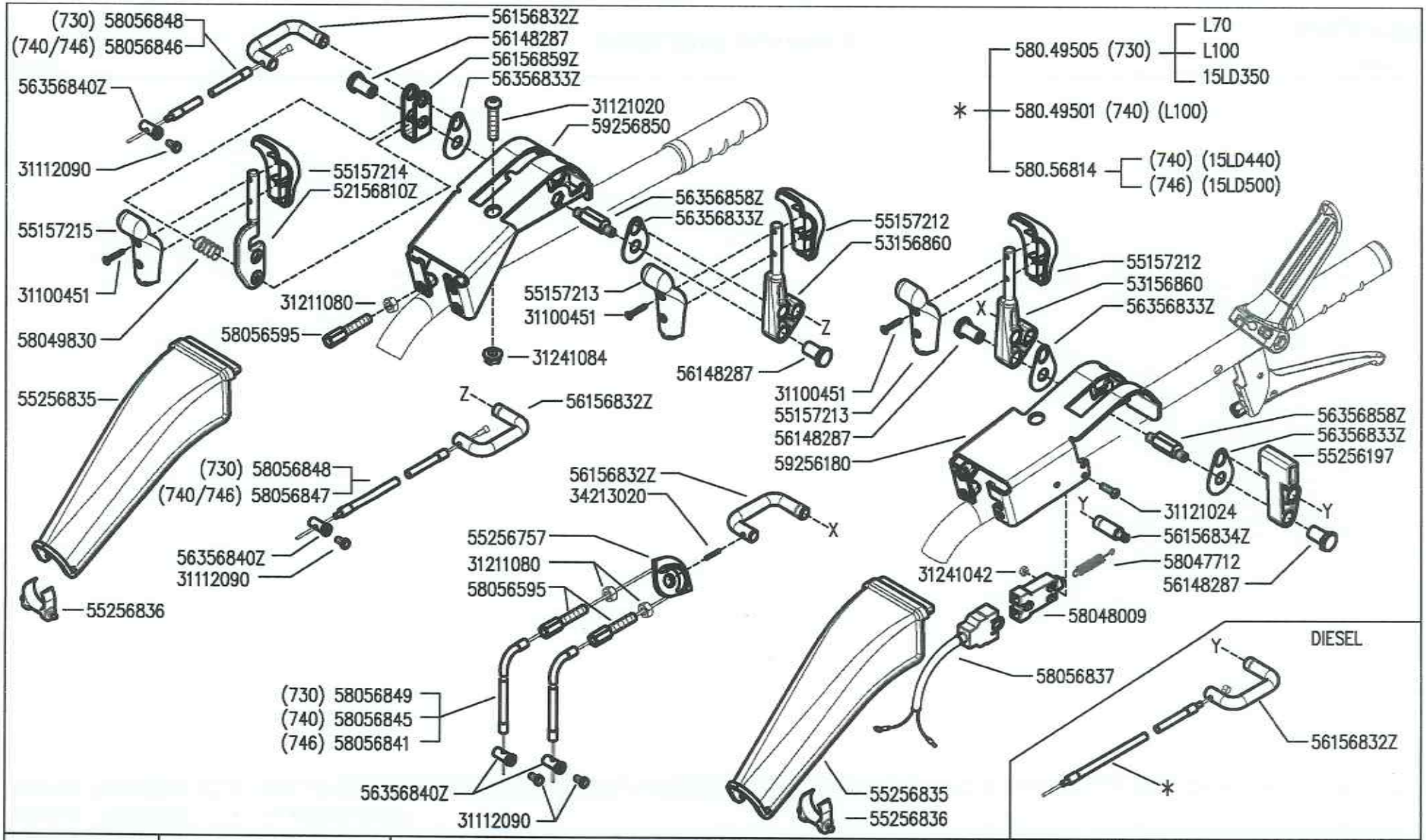

BCS

700 serie PS
PowerSafe®

COMANDI SUL MANUBRIO
(730–740–746)

HANDLEBAR CONTROLS
CONTROLES EN EL MANILLAR
CONTROLES SUR LE MANCERON
KONTROLLEN AM LINCHER

DALLA MACCHINA
DE LA MAQUINA
DE LA MACHINA
FROM THE MACHINE
AB DER MASCHINE

N.

L03 | Rev. 0

05/2009

DITE.BCS – Scala 1:5

Pos.	Code	Q.ty	Description	Notes
52156810	52156810Z	1	COMMAND LEVER	
56156832	56156832Z	1	U BOLT	
56156834	56156834Z	1	INDEXING BOLT	
56156859	56156859Z	1	FORK	
56356833	56356833Z	1	SMALL PLATE	
56356840	56356840Z	1	CLAMPING SCREW	
56356858	56356858Z	1	PIN	

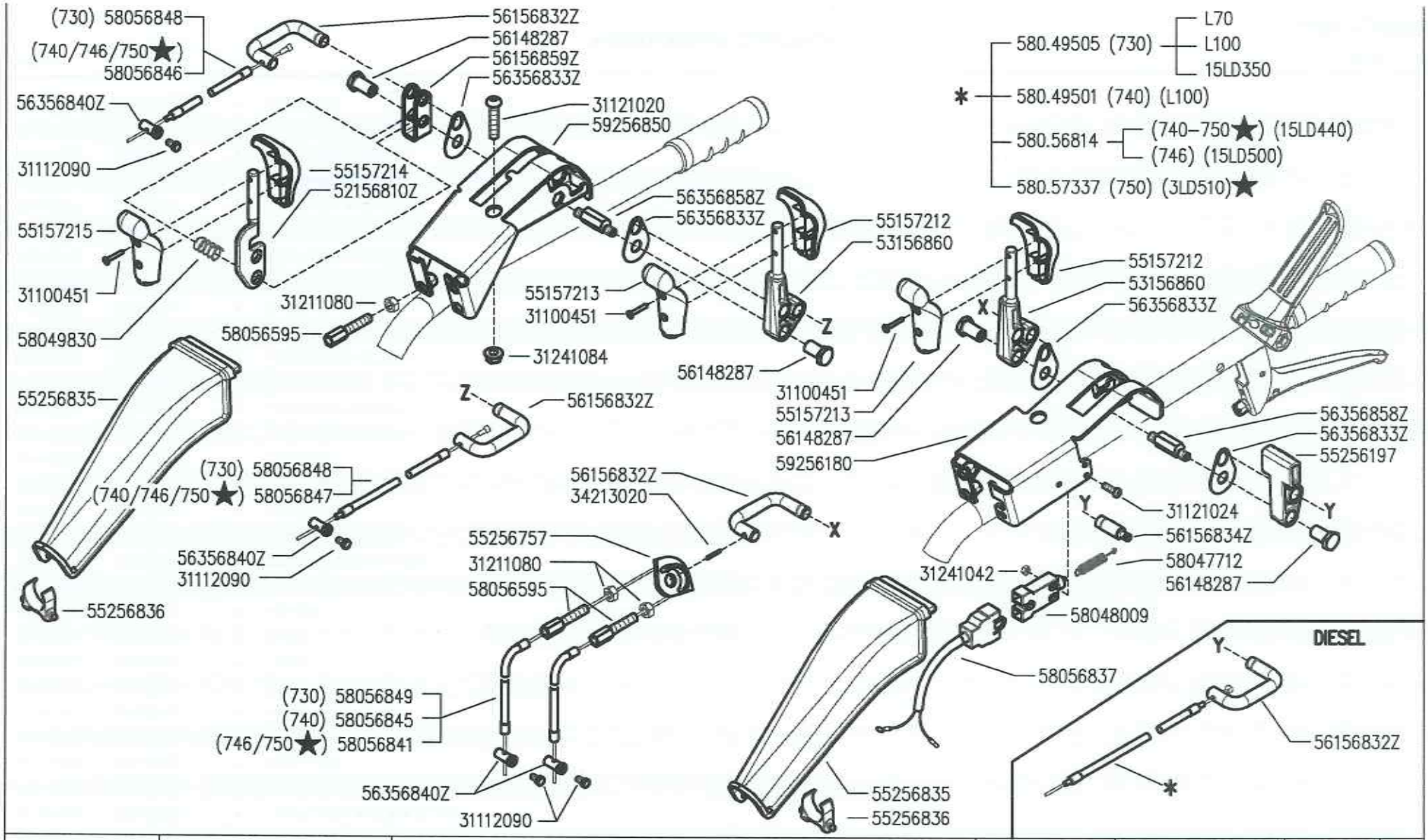

BCS	700 serie PS PowerSafe®	COMANDI SUL MANUBRIO (730–740–746–750★)	DALLA MACCHINA / DE LA MAQUINA / DE LA MACHINA / FROM THE MACHINE / AB DER MASCHINE	AGGIORNAMENTO	L03	Rev. 1
		HANDLEBAR CONTROLS / CONTROLES SUR LE MANCHERON	★N.	APLAZAMIENTO		
		CONTROLES EN EL MANILLAR / KONTROLLEN AM LINCHER		MISE A JOUR		
				REVISION		
				ANPASSUNG	11/2010	

DITE.BCS – Scala 1:5

Pos.	Code	Q.ty	Description	Notes
31100451	31100451	1	SCREW 3,5X25	
31112090	31112090	1	SCREW TE M6X16 UNI 5739 8G	
31121020	31121020	1	VITE TBCEI M8X40 ISO7380 10K	
31121024	31121024	1	SCREW TBCEI FL.M4X25	
31211080	31211080	1	NUT M8	
31241042	31241042	1	SELFLOCK NUT M4 FL.6S	
31241084	31241084	1	SELFLOCK NUT M8 6S	
34213020	34213020	1	ROLL PIN	
53156860	53156860	1	COMMAND LEVER	
55157212	55157212	1	GRIP	
55157213	55157213	1	GRIP	
55157214	55157214	1	GRIP	
55157215	55157215	1	GRIP	
55256197	55256197	1	LEVER	
55256757	55256757	1	PULLEY	
55256835	55256835	1	PROTECTION COVER	
55256836	55256836	1	CROSS MEMBER	
56148287	56148287	1	STUD BOLT	
58047712	58047712	1	SPRING	
58048009	58048009	1	SWITCH	
58049501	58049501	1	LINE AND SHEATH	
58049505	58049505	1	LINE AND SHEATH	
58049830	58049830	1	SPRING	
58056595	58056595	1	ADJUSTING SCREW	
58056814	58056814	1	LINE AND SHEATH	
58056837	58056837	1	WIRING	
58056841	58056841	1	LINE AND SHEATH	
58056845	58056845	1	LINE AND SHEATH	
58056846	58056846	1	LINE AND SHEATH	
58056847	58056847	1	LINE AND SHEATH	
58056848	58056848	1	LINE AND SHEATH	
58056849	58056849	1	LINE AND SHEATH	
58057337	58057337	1	LINE AND SHEATH	
59256180	59256180	1	SUPPORT	

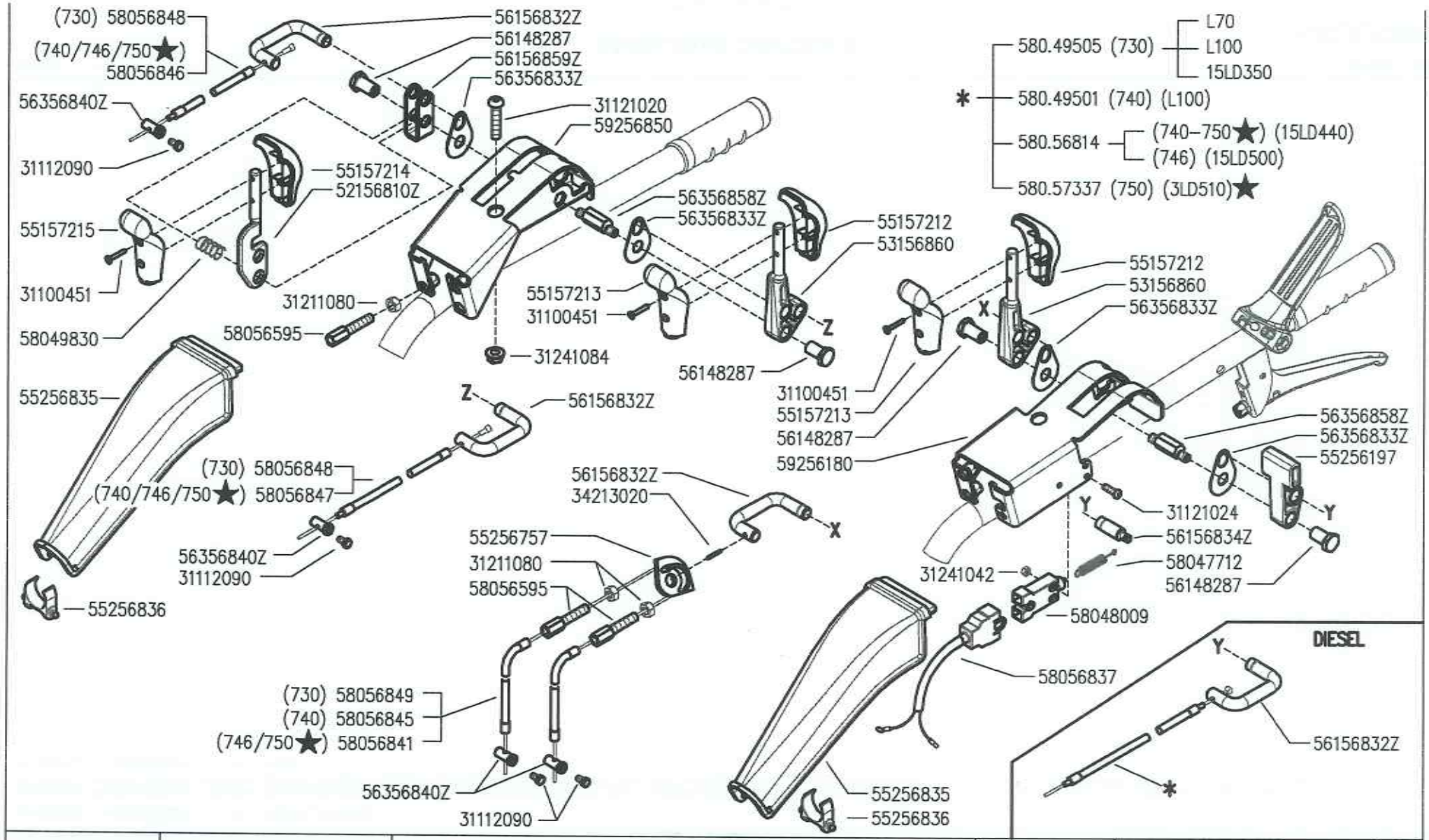

BCS

700 serie PS
PowerSafe®

COMANDI SUL MANUBRIO
(730–740–746–750★)

HANDLEBAR CONTROLS

CONTROLES EN EL MANILLAR

CONTROLES SUR LE MANCHERON

KONTROLLEN AM LINCHER

DALLA MACCHINA
DE LA MAQUINA
DE LA MACHINA
FROM THE MACHINE
AB DER MASCHINE

★ N.

AGGIORNAMENTO	
APLAZAMIENTO	
MISE A JOUR	
REVISION	
ANPASSUNG	

L03 — Rev. 1

11/2010

DITE.BCS – Scala 1:5

Pos.	Code	Q.ty	Description	Notes
59256850	59256850	1	SUPPORT	
52156810	52156810Z	1	COMMAND LEVER	
56156832	56156832Z	1	U BOLT	
56156834	56156834Z	1	INDEXING BOLT	
56156859	56156859Z	1	FORK	
56356833	56356833Z	1	SMALL PLATE	
56356840	56356840Z	1	CLAMPING SCREW	
56356858	56356858Z	1	PIN	

HANDLEBAR CONTROLS

CODE REV
L.03.01.A0001_02

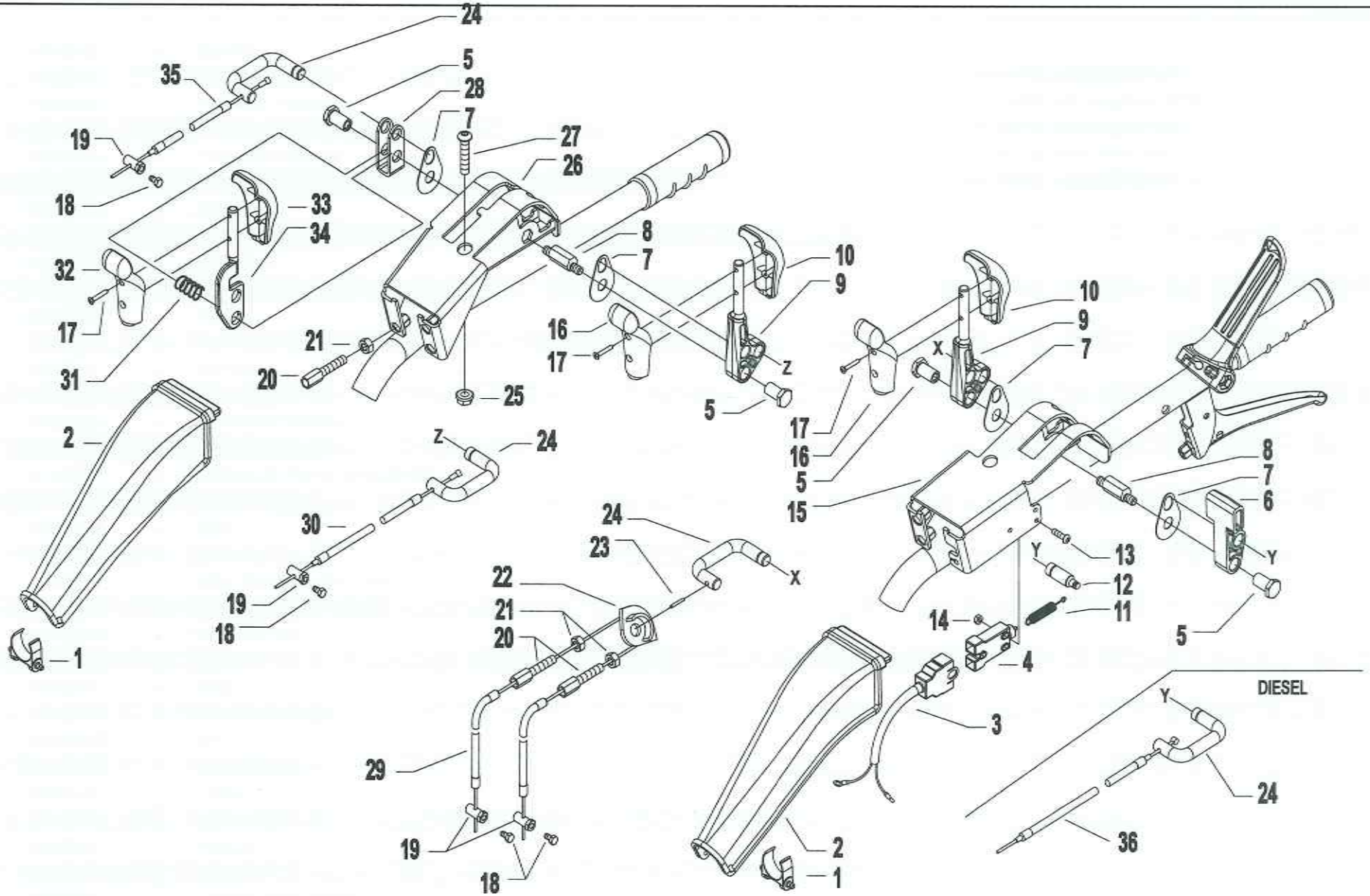

Pos.	Code	Q.ty	Description	Notes
1	55256836	1	CROSS MEMBER	
2	55256835	1	PROTECTION COVER	
3	58056837	1	WIRING	
4	58048009	1	SWITCH	
5	56148287	1	STUD BOLT	
6	55256197	1	LEVER	
7	56356833Z	1	SMALL PLATE	
8	56356858Z	1	PIN	
9	53156860	1	COMMAND LEVER	
10	55157212	1	GRIP	
11	58047712	1	SPRING	
12	56156834Z	1	INDEXING BOLT	
13	31121024	1	SCREW TBCEI FL.M4X25	
14	31241042	1	SELFLOCK NUT M4 FL.6S	
15	59256180	1	SUPPORT	
16	55157213	1	GRIP	
17	31100451	1	SCREW 3,5X25	
18	31112090	1	SCREW TE M6X16 UNI 5739 8G	
19	56356840Z	1	CLAMPING SCREW	
20	58056595	1	ADJUSTING SCREW	
21	31211080	1	NUT M8	
22	55256757	1	PULLEY	
23	34213020	1	ROLL PIN	
24	56156832Z	1	U BOLT	
25	31241084	1	SELFLOCK NUT M8 6S	
26	59256850	1	SUPPORT	
27	31121020	1	VITE TBCEI M8X40 ISO7380 10K	
28	56156859Z	1	FORK	
29	58056841	1	LINE AND SHEATH	For models 746/750 PS Series
29	58056845	1	LINE AND SHEATH	For the 740 model series PS
29	58056849	1	LINE AND SHEATH	For models 730/738 PS Series
30	58056847	1	LINE AND SHEATH	For models 740/746/750 PS Series
30	58056848	1	LINE AND SHEATH	For models 730/738 PS Series
31	58049830	1	SPRING	

HANDLEBAR CONTROLS

CODE REV
L.03.01.A0001_02

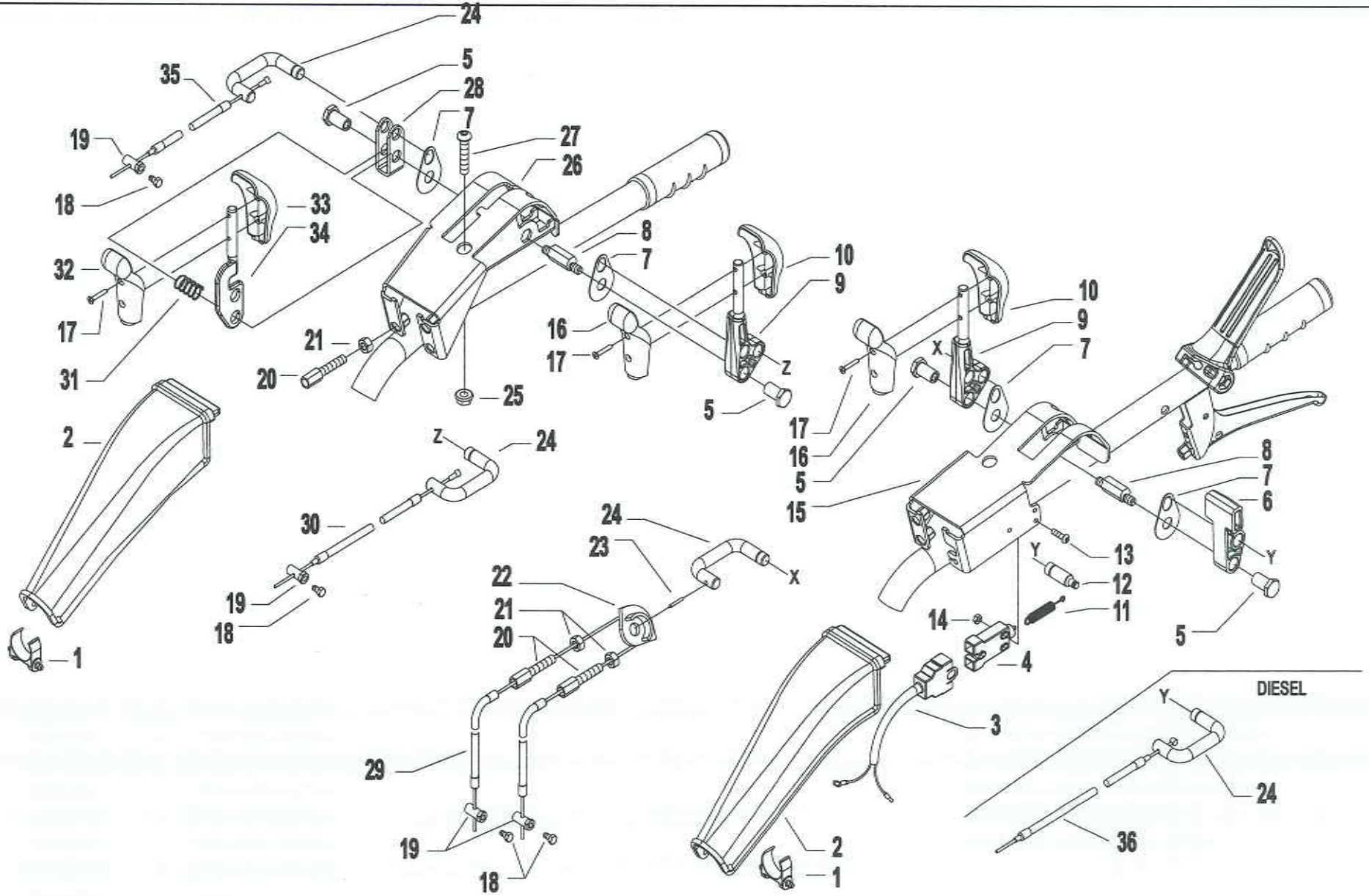

Pos.	Code	Q.ty	Description	Notes
32	55157215	1	GRIP	
33	55157214	1	GRIP	
34	52156810Z	1	COMMAND LEVER	
35	58056846	1	LINE AND SHEATH	For models 740/746/750 PS Series
35	58056848	1	LINE AND SHEATH	For models 730/738 PS Series
36	58057337	1	LINE AND SHEATH	For Model 750 series PS engine 3LD510
36	58056814	1	LINE AND SHEATH	For models 740/750 series PS engine 15LD440. For model
36	58049501	1	LINE AND SHEATH	For model series 740 PS engine with L100
36	58049505	1	LINE AND SHEATH	For models 730/738 series engines with PS L70/L100/15LD500

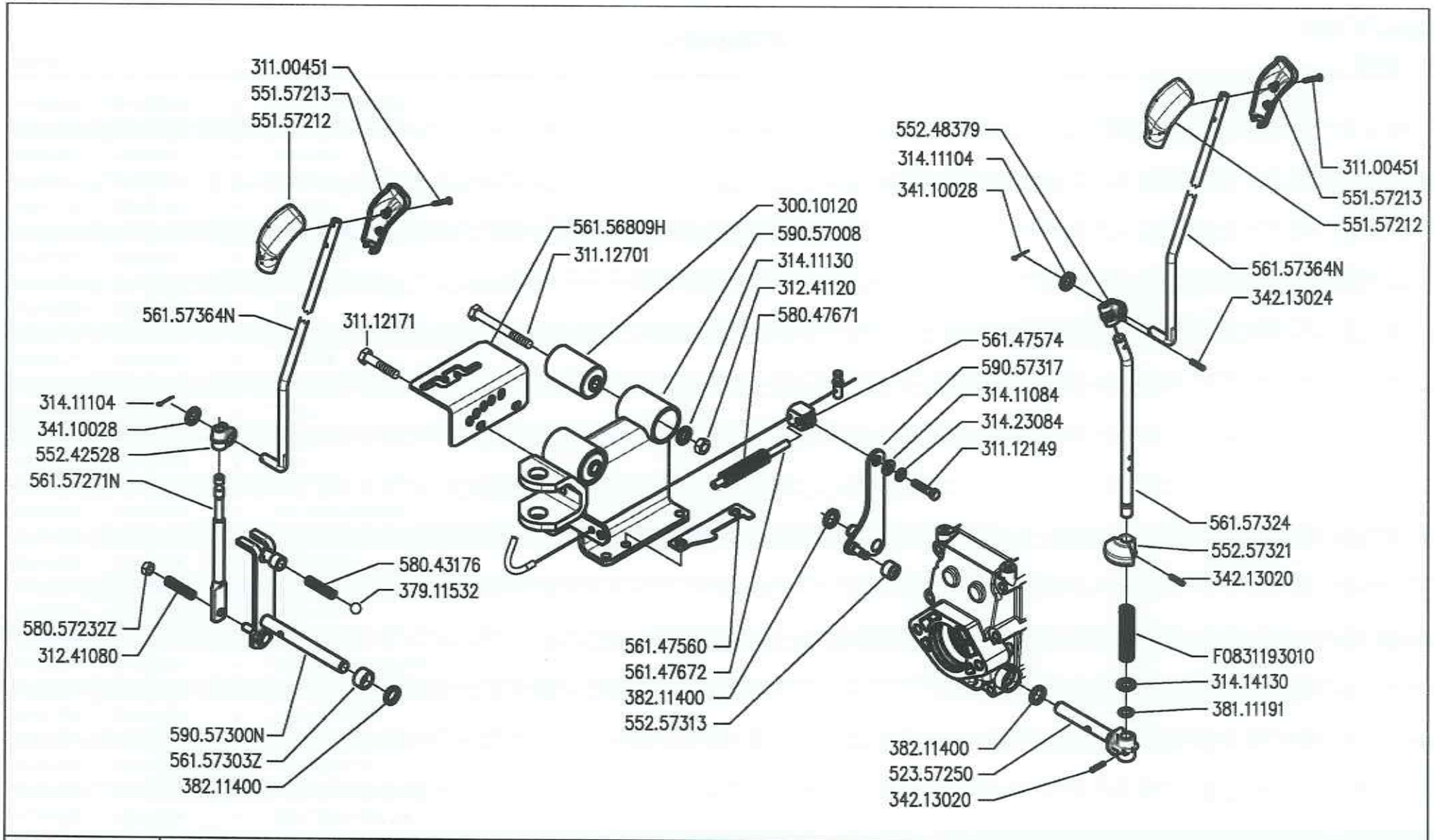

BCS	700 serie PS PowerSafe®	CONTROLS MANDOS	COMANDI (740–746)	COMMANDES ANTRIEBE	DALLA MACCHINA DE LA MAQUINA DE LA MACHINA FROM THE MACHINE AB DER MASCHINE N.		M03 Rev. 0 05/2009

DITE.BCS – Scala 1:6

Pos.	Code	Q.ty	Description	Notes
30010120	30010120	1	SILENT-BLOCK 12X40X58X66	
31100451	31100451	1	SCREW 3,5X25	
31112149	31112149	1	SCREW TE M8X12 UNI 5739 8G	
31112171	31112171	1	SCREW TE C/F M8X16 DIN 6921	
31112701	31112701	1	SCREW TE M12X100 UNI 5737	
31241080	31241080	1	SELFLOCK NUT M8	
31241120	31241120	1	SELFLOCK NUT M12	
31411084	31411084	1	WASHER 8,4x17	
31411104	31411104	1	WASHER 10,5x18	
31411130	31411130	1	WASHER 13x24	
31414130	31414130	1	WASHER 13	
31423084	31423084	1	SPRING WASHER 8,4	
34110028	34110028	1	SPLIT PIN	
34213020	34213020	1	ROLL PIN	
34213024	34213024	1	ROLL PIN	
37911532	37911532	1	BALL 15/32	
38111191	38111191	1	O-RING 115 (11,91X2,62)	
38211400	38211400	1	OIL SEAL 14X22X4	
52357250	52357250	1	PIN	
55157212	55157212	1	GRIP	
55157213	55157213	1	GRIP	
55242528	55242528	1	JOINT	
55248379	55248379	1	JOINT	
55257313	55257313	1	ROLLER	
55257321	55257321	1	STOP	
56147560	56147560	1	STOP	
56147574	56147574	1	SMALL BLOCK	
56147672	56147672	1	GUIDE PIN	
56157324	56157324	1	PTO LEVER	
58043176	58043176	1	SPRING	
58047671	58047671	1	SPRING	
59057008	59057008	1	SUPPORT	
59057317	59057317	1	LEVER	
56156809	56156809H	1	GEAR SELECTOR	

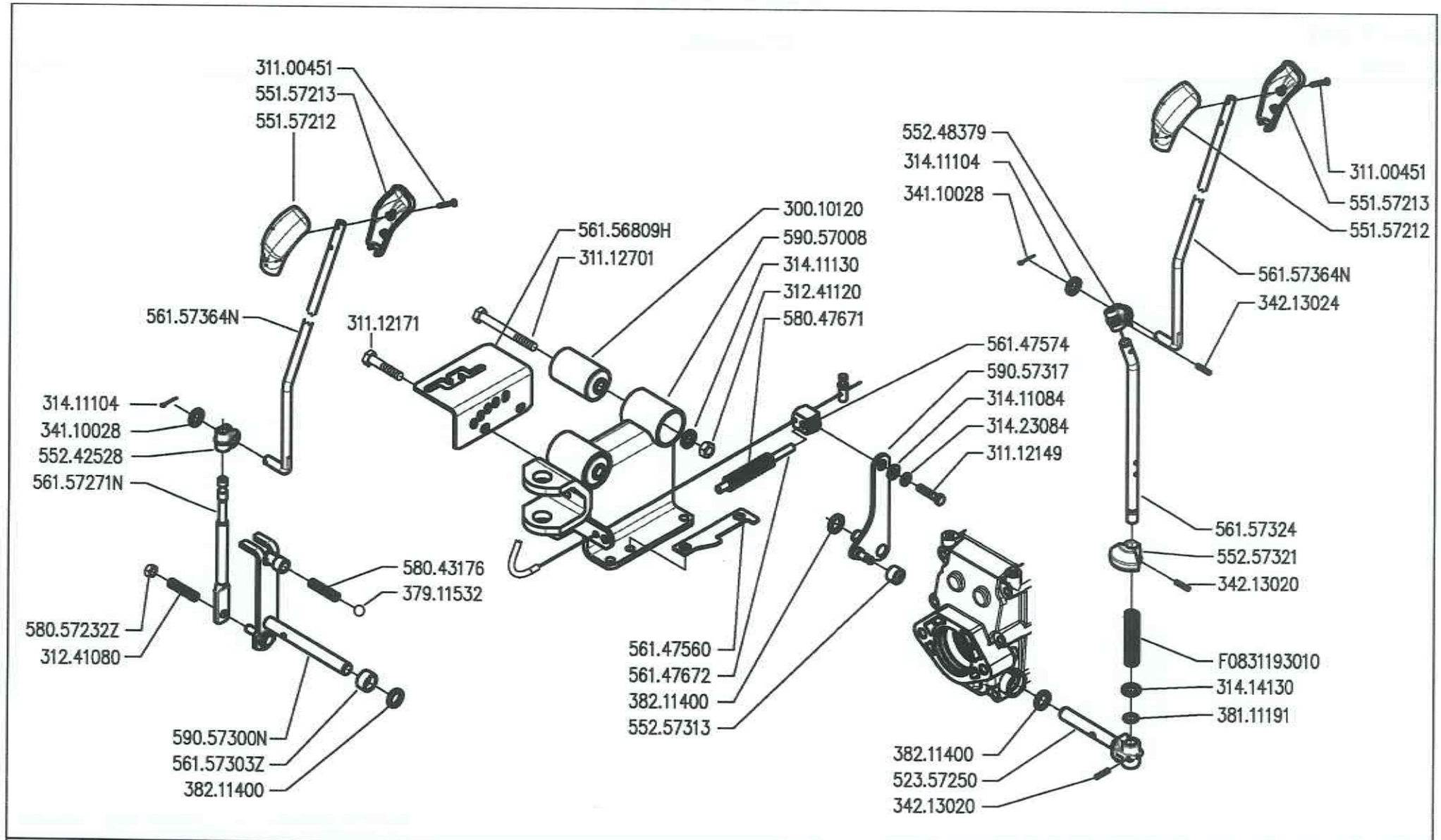

BCS	700 serie PS PowerSafe®	CONTROLS MANDOS	COMANDI (740–746)	COMMANDES ANTRIEBE	DALLA MACCHINA DE LA MAQUINA DE LA MACHINA FROM THE MACHINE AB DER MASCHINE N.	M03 Rev. 0 05/2009

DITE.BCS – Scala 1:6

Pos.	Code	Q.ty	Description	Notes
56157271	56157271N	1	COMMAND LEVER	
56157303	56157303Z	1	SPACER	
56157364	56157364N	1	PULL ROD	
58057232	58057232Z	1	SPRING	
59057300	59057300N	1	GEAR LEVER	
F0831193	F0831193010	1	SPRING DM.15X70	

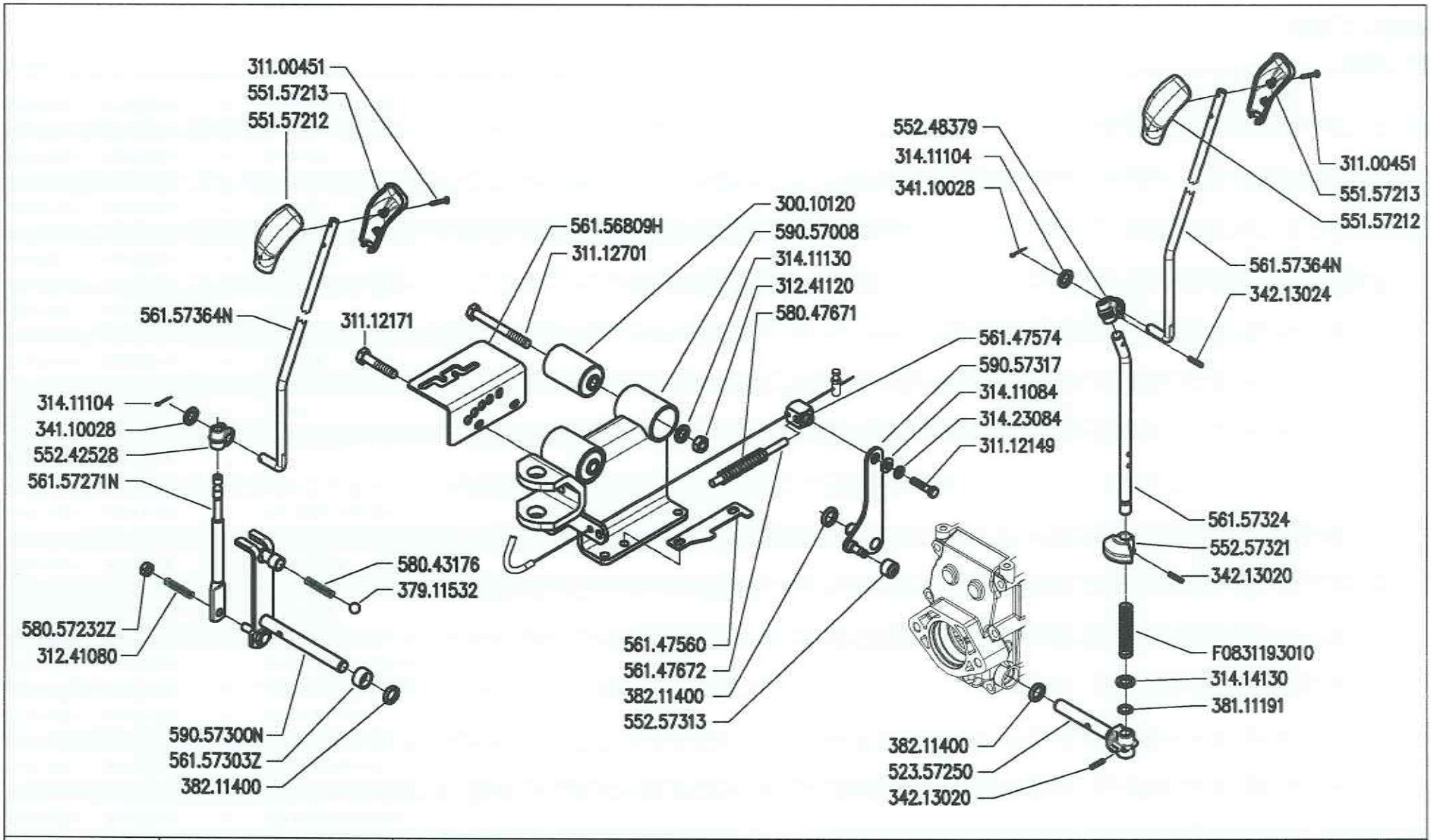

BCS	700 serie PS PowerSafe®	CONTROLS MANDOS	COMANDI (740–746–750★)	COMMANDES ANTRIEBE	DALLA MACCHINA DE LA MAQUINA DE LA MACHINA FROM THE MACHINE AB DER MASCHINE ★ N.	AGGIORNAMENTO APLAZAMIENTO MISE A JOUR REVISION ANPASSUNG	M03 Rev. 1 11/2010

Pos.	Code	Q.ty	Description	Notes
30010120	30010120	1	SILENT-BLOCK 12X40X58X66	
31100451	31100451	1	SCREW 3,5X25	
31112149	31112149	1	SCREW TE M8X12 UNI 5739 8G	
31112171	31112171	1	SCREW TE C/F M8X16 DIN 6921	
31112701	31112701	1	SCREW TE M12X100 UNI 5737	
31241080	31241080	1	SELFLOCK NUT M8	
31241120	31241120	1	SELFLOCK NUT M12	
31411084	31411084	1	WASHER 8,4x17	
31411104	31411104	1	WASHER 10,5x18	
31411130	31411130	1	WASHER 13x24	
31414130	31414130	1	WASHER 13	
31423084	31423084	1	SPRING WASHER 8,4	
34110028	34110028	1	SPLIT PIN	
34213020	34213020	1	ROLL PIN	
34213024	34213024	1	ROLL PIN	
37911532	37911532	1	BALL 15/32	
38111191	38111191	1	O-RING 115 (11,91X2,62)	
38211400	38211400	1	OIL SEAL 14X22X4	
52357250	52357250	1	PIN	
55157212	55157212	1	GRIP	
55157213	55157213	1	GRIP	
55242528	55242528	1	JOINT	
55248379	55248379	1	JOINT	
55257313	55257313	1	ROLLER	
55257321	55257321	1	STOP	
56147560	56147560	1	STOP	
56147574	56147574	1	SMALL BLOCK	
56147672	56147672	1	GUIDE PIN	
56157324	56157324	1	PTO LEVER	
58043176	58043176	1	SPRING	
58047671	58047671	1	SPRING	
59057008	59057008	1	SUPPORT	
59057317	59057317	1	LEVER	
56156809	56156809H	1	GEAR SELECTOR	

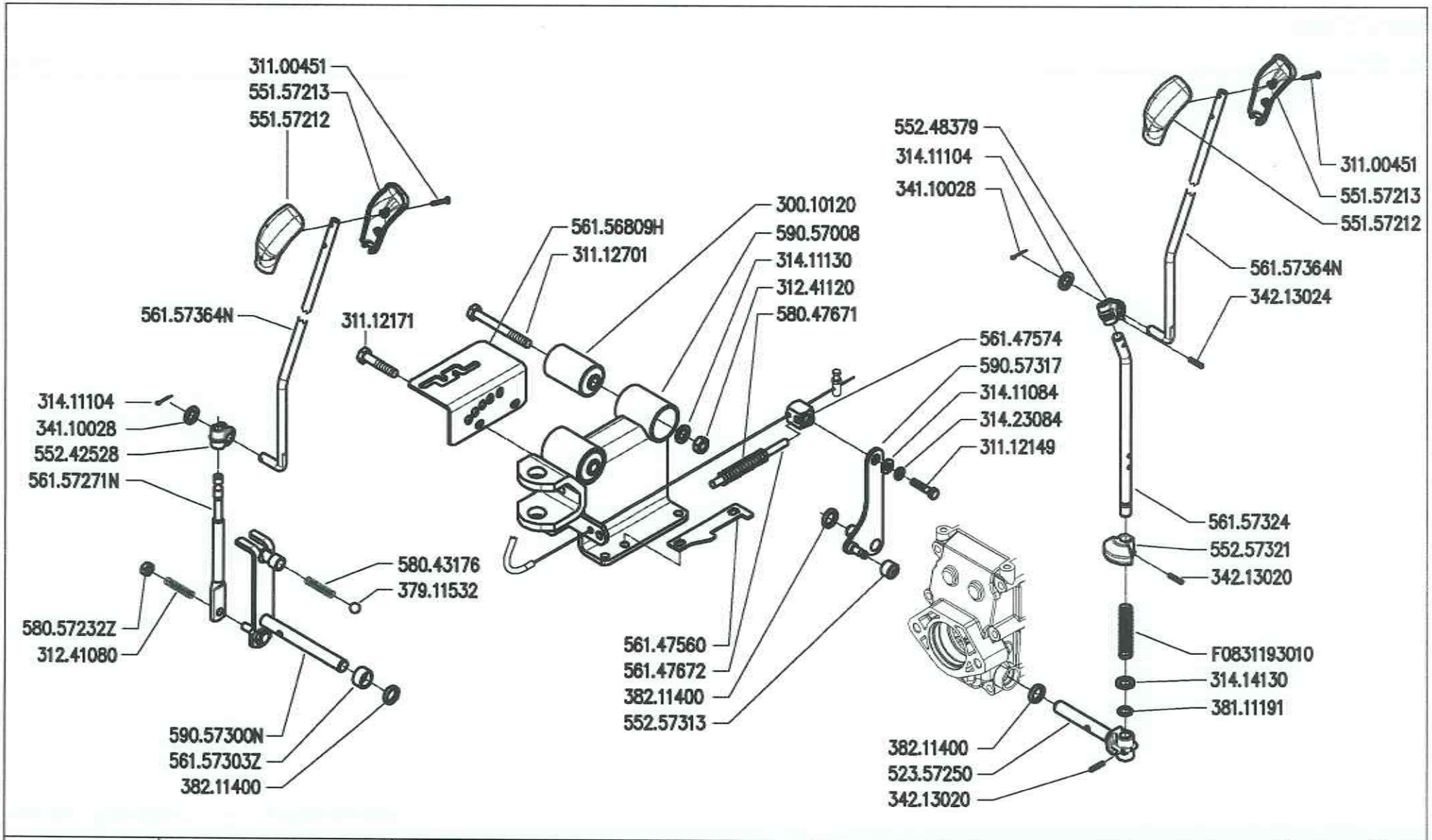

BCS	700 serie PS PowerSafe®	CONTROLS MANDOS	COMANDI (740–746–750★)	COMMANDES ANTRIEBE	DALLA MACCHINA DE LA MAQUINA DE LA MACHINA FROM THE MACHINE AB DER MASCHINE ★ N.	AGGIORNAMENTO APLAZAMIENTO MISE A JOUR REVISION ANPASSUNG	M03 Rev. 1 11/2010

Pos.	Code	Q.ty	Description	Notes
56157271	56157271N	1	COMMAND LEVER	
56157303	56157303Z	1	SPACER	
56157364	56157364N	1	PULL ROD	
58057232	58057232Z	1	SPRING	
59057300	59057300N	1	GEAR LEVER	
F0831193	F0831193010	1	SPRING DM.15X70	

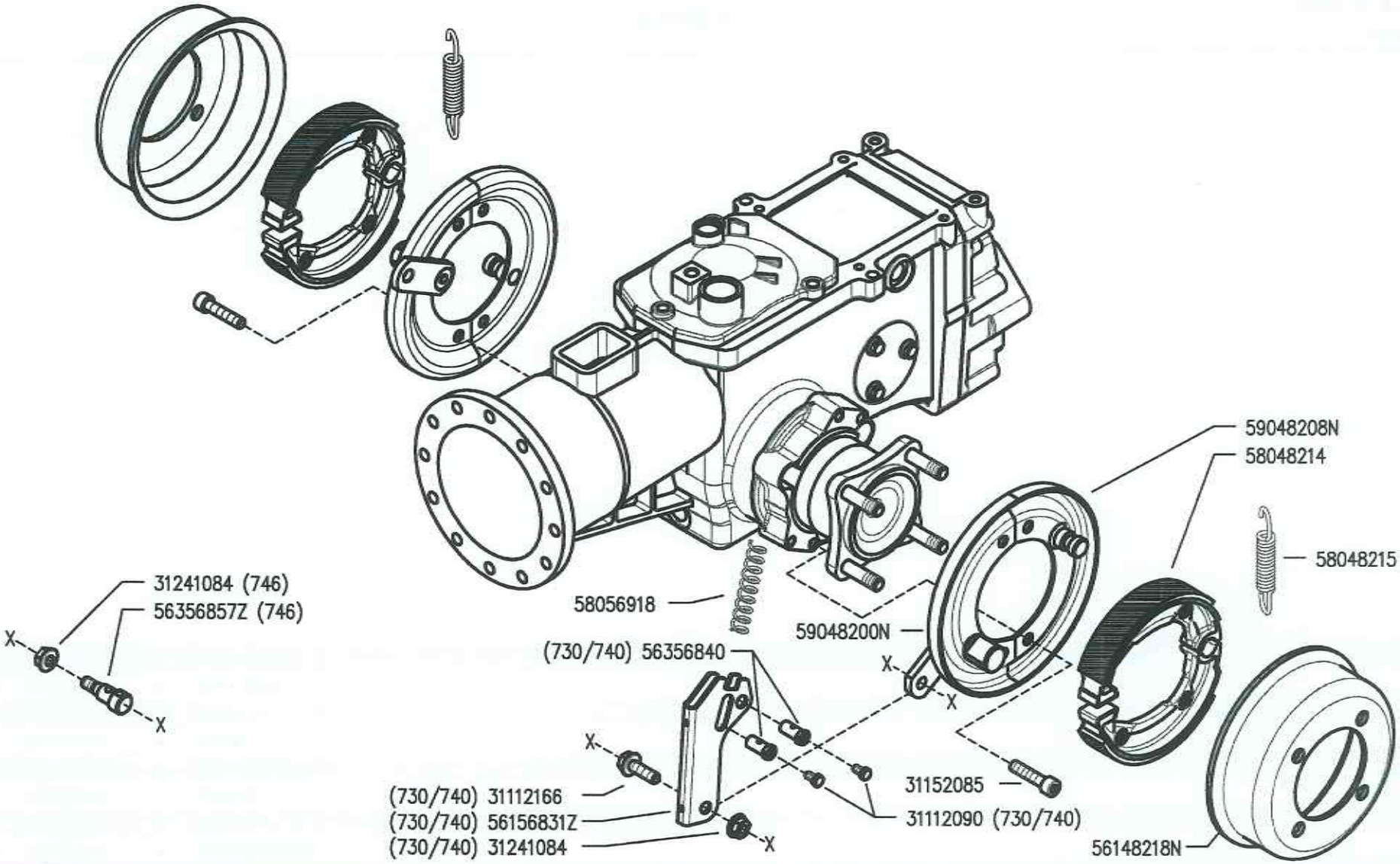

BCS	700 serie PS PowerSafe®	BRAKES FRENOS	FRENI (730–740–746)	FREINS BREMSEN	DALLA MACCHINA DE LA MAQUINA DE LA MACHINA FROM THE MACHINE AB DER MASCHINE N.	N02 Rev. 0 05/2009

DITE.BCS – Scala 1:4

Pos.	Code	Q.ty	Description	Notes
31112090	31112090	1	SCREW TE M6X16 UNI 5739 8G	
31112166	31112166	1	SCREW TE C/F M8X25 DIN 6921 8G	
31152085	31152085	1	SCREW TCEI M8X25 UNI 5931	
31241084	31241084	1	SELFLOCK NUT M8 6S	
56356840	56356840	1	CLAMPING SCREW	
58048214	58048214	1	BRAKE BLOCK	
58048215	58048215	1	SPRING	
58056918	58056918	1	SPRING	
56148218	56148218N	1	BRAKE DRUM	
56156831	56156831Z	1	FORK	
56356857	56356857Z	1	STOP	
59048200	59048200N	1	HALF DISC	
59048208	59048208N	1	HALF DISC	

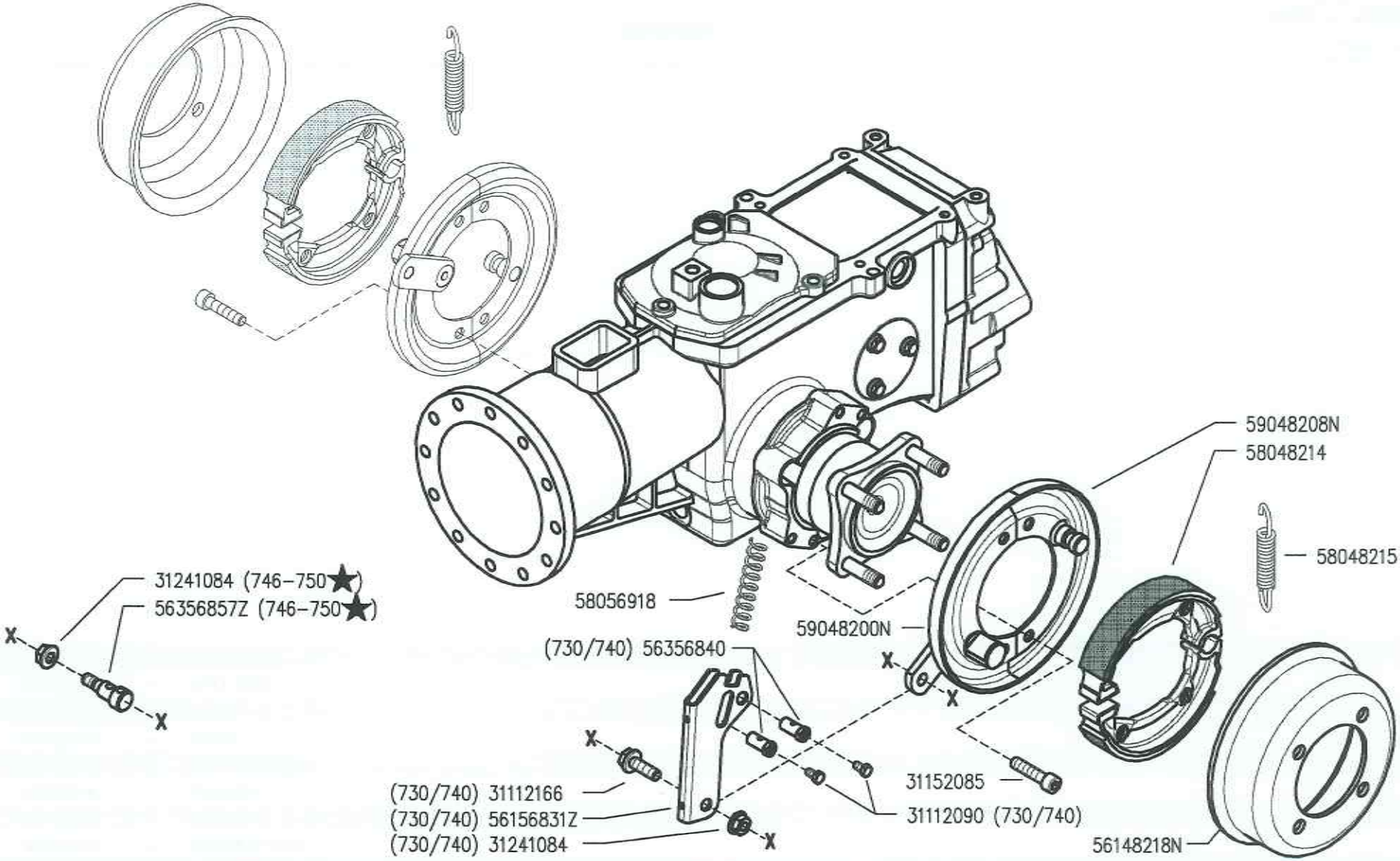

BCS	700 serie PS PowerSafe®	BRAKES / FRENOS	FRENI (730-740-746-750★)	FREINS / BREMSEN	DALLA MACCHINA / DE LA MAQUINA / DE LA MACHINA / FROM THE MACHINE / AB DER MASCHINE ★N.	AGGIORNAMENTO / APLAZAMIENTO / MISE A JOUR / REVISION / ANPASSUNG	N02	Rev. 1
							11/2010	

DITE.BCS - Scala 1:4

Pos.	Code	Q.ty	Description	Notes
31112090	31112090	1	SCREW TE M6X16 UNI 5739 8G	
31112166	31112166	1	SCREW TE C/F M8X25 DIN 6921 8G	
31152085	31152085	1	SCREW TCEI M8X25 UNI 5931	
31241084	31241084	1	SELFLOCK NUT M8 6S	
56356840	56356840	1	CLAMPING SCREW	
58048214	58048214	1	BRAKE BLOCK	
58048215	58048215	1	SPRING	
58056918	58056918	1	SPRING	
56148218	56148218N	1	BRAKE DRUM	
56156831	56156831Z	1	FORK	
56356857	56356857Z	1	STOP	
59048200	59048200N	1	HALF DISC	
59048208	59048208N	1	HALF DISC	

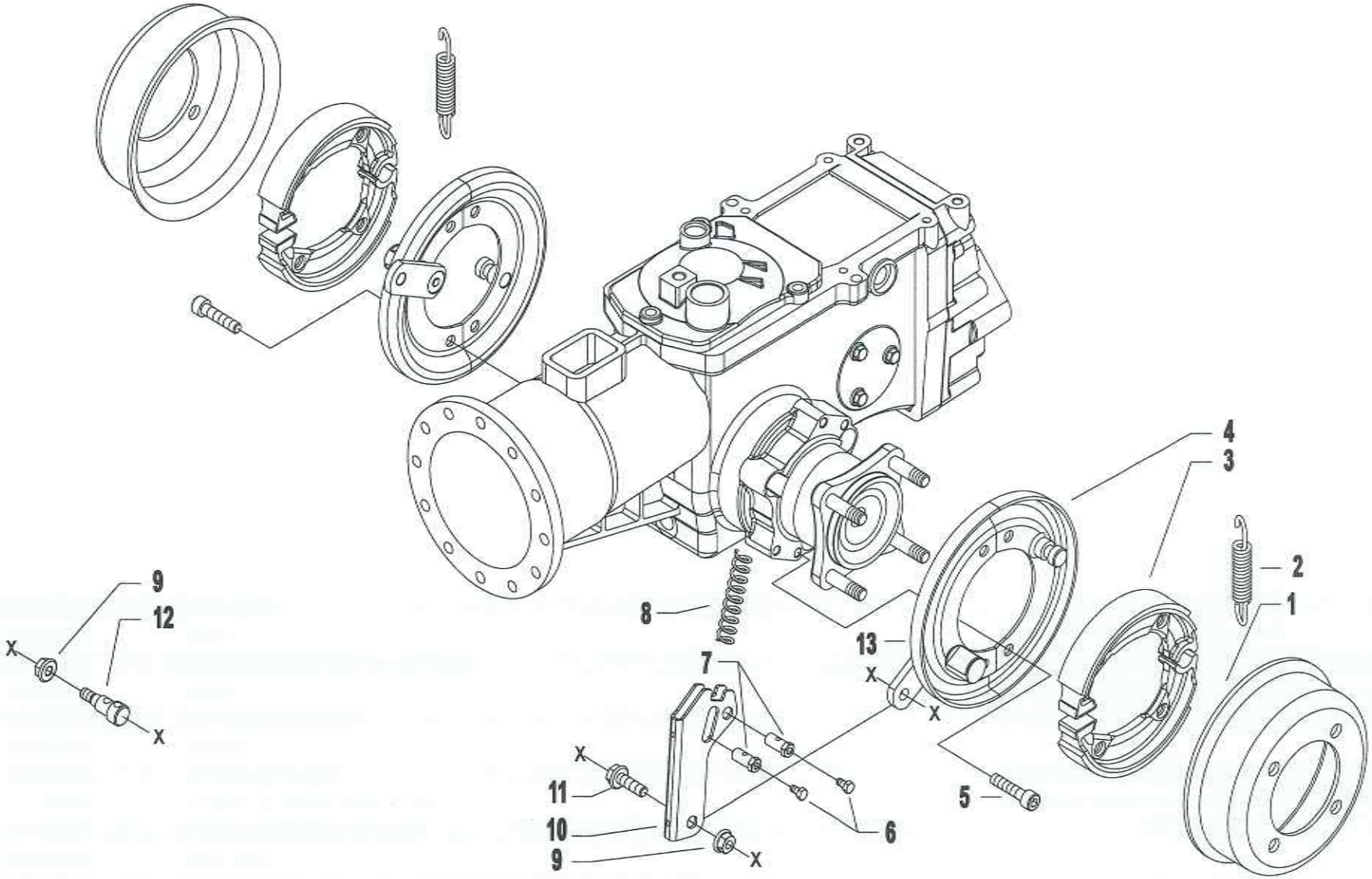
4
3
2
1
9
12
X
X
8
13
7
X
X
X
11
10
9
X
6
5

Pos.	Code	Q.ty	Description	Notes
1	56148218N	1	BRAKE DRUM	
2	58048215	1	SPRING	
3	58048214	1	BRAKE BLOCK	
4	59048208N	1	HALF DISC	
5	31152085	1	SCREW TCEI M8X25 UNI 5931	
6	31112090	1	SCREW TE M6X16 UNI 5739 8G	Used in the models 730/730 EasyDrive/738/740 PS Series
7	56356840	1	CLAMPING SCREW	Used in the models 730/730 EasyDrive/738/740 PS Series
8	58056918	1	SPRING	
9	31241084	1	SELFLOCK NUT M8 6S	Used in the models 730/730 EasyDrive/740/746/750 PS Series
10	56156831Z	1	FORK	Used in the models 730/730 EasyDrive/738/740 PS Series
11	31112166	1	SCREW TE C/F M8X25 DIN 6921 8G	Used in the models 730/730 EasyDrive/738/740 PS Series
12	56356857Z	1	STOP	Used in the models 746/750 PS Series
13	59048200N	1	HALF DISC	

	A	B	C	D
4.00-8"	39114008	39414008	58043250	92243686 (kg.10)
4.0-10"	39114010	39414010	58048330	92248715 (kg.15)
4.0-10"	39114010	39414010	58057837 (FIX)	-
5.0-10"	39115010	39415010	58048330	92248715 (kg.15)
5.0-10"	39115010	39415010	58057837 (FIX)	-
5.00-12"	39115012	39415012	58044804	92248720 (kg.34)
6.5/80-12"	39116018	39416018	58044804	92248720 (kg.34)
6.5/80-15"	39116020	39416020	58042746	92248720 (kg.34)

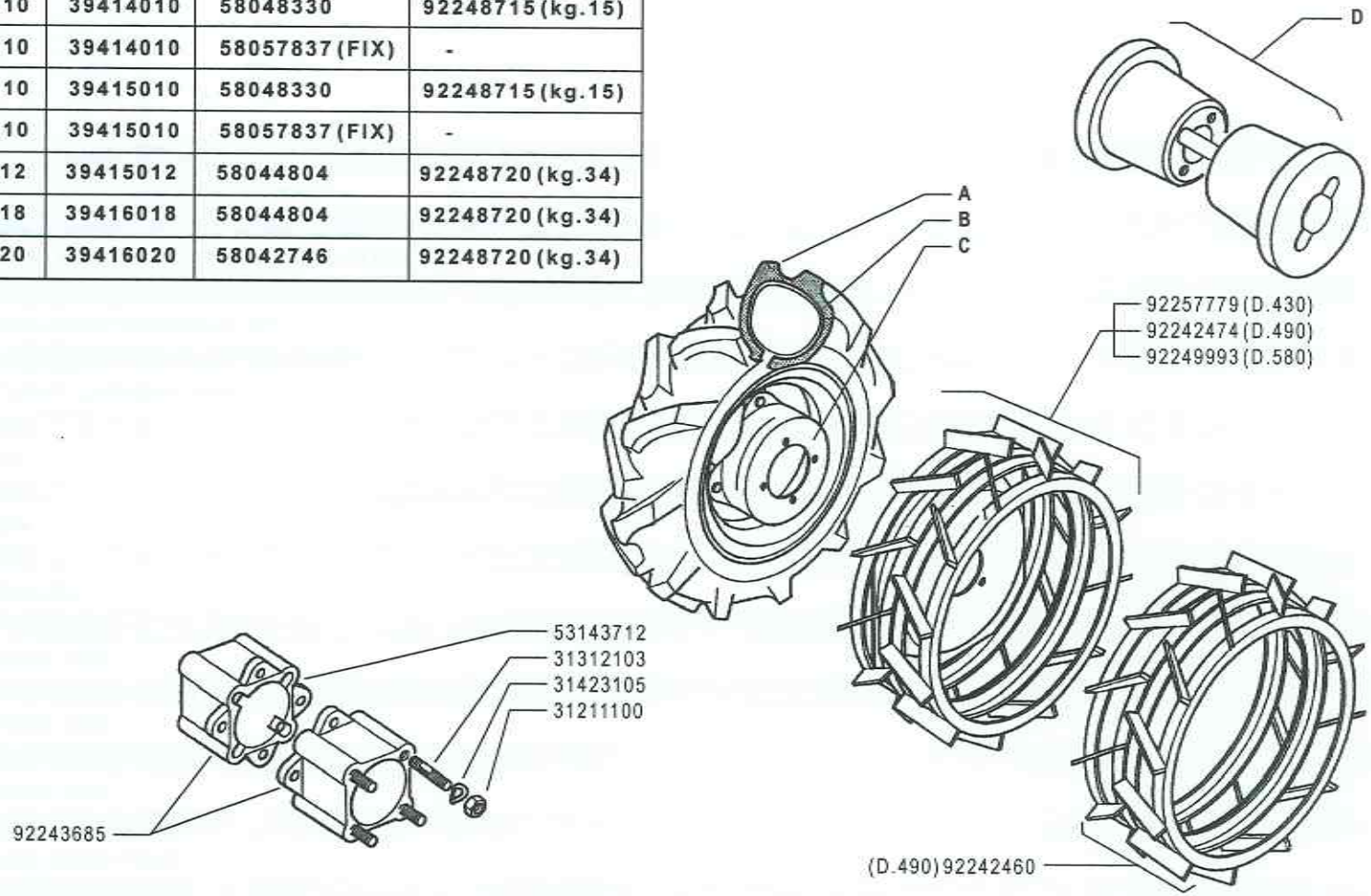

BCS

700 serie PS
PowerSafe ®

RUOTE

WHEELS
RUEDAS
ROUES
RÄDER

DALLA MACCHINA
FROM THE MACHINE
DE LA MACHINE
DE LA MAQUINA
AB DER MASCHINE

N.

P01

Rev. 0

05/2009

2ENNE

Pos.	Code	Q.ty	Description	Notes
31211100	31211100	1	NUT M10	
31312103	31312103	1	STUD BOLT M10X46X24X16	
31423105	31423105	1	SPRING WASHER 10,5	
39114008	39114008	1	TYRE 4.00-8 2PR	
39114010	39114010	1	TYRE 4.0-10 2PR	
39115010	39115010	1	TYRE 5.00-10 2PR	
39115012	39115012	1	TYRE 5.00-12 2PR	
39116018	39116018	1	TYRE 6.5/80-12 2PR	
39116020	39116020	1	TYRE 6.5/80-15 4PR	
39414008	39414008	1	INNER TUBE	
39414010	39414010	1	INNER TUBE	
39415010	39415010	1	INNER TUBE	
39415012	39415012	1	INNER TUBE	
39416018	39416018	1	INNER TUBE	
39416020	39416020	1	INNER TUBE	
53143712	53143712	1	SPACER	
58042746	58042746	1	RIM	
58043250	58043250	1	RIM	
58044804	58044804	1	RIM	
58048330	58048330	1	RIM	
58057837	58057837	1	RIM	
92242460	92242460	1	COUPLE TWINNING RINGS	
92242474	92242474	1	PAIR STEEL CAGE WHEELS D. CM.49	
92243685	92243685	1	PAIR WHEEL SPACERS 6 CM	
92243686	92243686	1	PAIR OF WEIGHTS FOR 8 WHEELS 11 KGS	
92248715	92248715	1	PAIR OF WEIGHTS FOR 10 WHEELS 15 KGS	
92248720	92248720	1	PAIR OF WEIGHTS FOR 12 AND 15 WHEELS - 34 KGS	
92249993	92249993	1	STEEL CAGE WHEELS D. 58 (PAIR)	
92257779	92257779	1	CAGE WHEELS DIAM. 43 (PAIR) FOR 720/730	

	A	B	C	D
4.00-8"	39114008	39414008	58043250	92243686 (kg.10)
4.0-10"	39114010	39415010 ★	58048330	92248715 (kg.15)
5.0-10"	39115010	39415010	58048330	92248715 (kg.15)
5.00-12"	39115012	39415012	58044804	92248720 (kg.34)
6.5/80-12"	39116018	39416018	58044804	92248720 (kg.34)
6.5/80-15"	39116020	39416020	58042746	92248720 (kg.34)

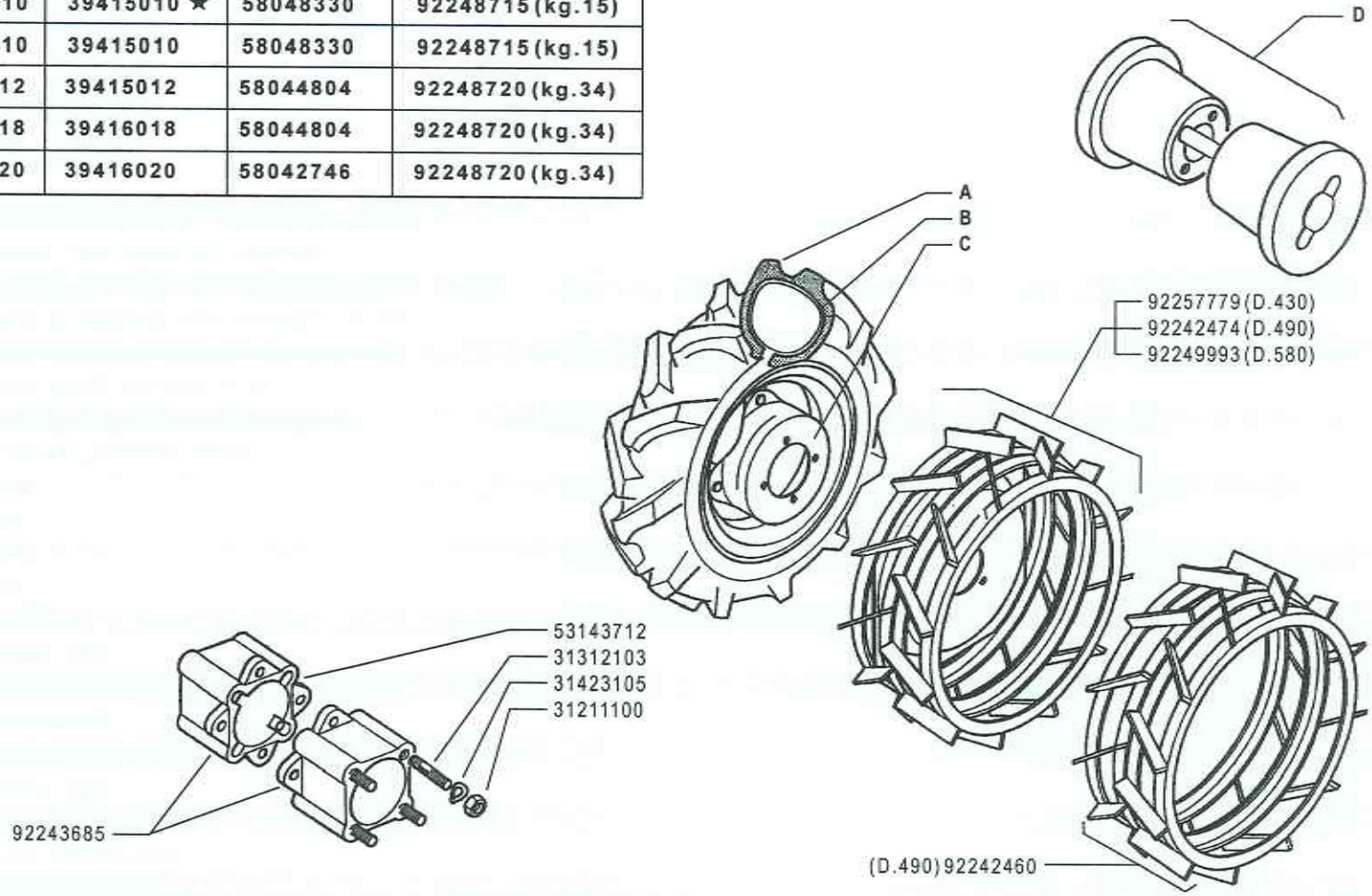

BCS

700 serie PS
PowerSafe ®

RUOTE

WHEELS
RUEDAS
ROUES
RÄDER

DALLA MACCHINA
FROM THE MACHINE
DE LA MACHINE
DE LA MAQUINA
AB DER MASCHINE

★N.

AGGIORNAMENTO
REVISION
MISE A JOUR
APLAZAMIENTO
ANPASSUNG

P01

Rev. 1

11/2010

2ENNE

Pos.	Code	Q.ty	Description	Notes
31211100	31211100	1	NUT M10	
31312103	31312103	1	STUD BOLT M10X46X24X16	
31423105	31423105	1	SPRING WASHER 10,5	
39114008	39114008	1	TYRE 4.00-8 2PR	
39114010	39114010	1	TYRE 4.0-10 2PR	
39115010	39115010	1	TYRE 5.00-10 2PR	
39115012	39115012	1	TYRE 5.00-12 2PR	
39116018	39116018	1	TYRE 6.5/80-12 2PR	
39116020	39116020	1	TYRE 6.5/80-15 4PR	
39414008	39414008	1	INNER TUBE	
39415010	39415010	1	INNER TUBE	
39415012	39415012	1	INNER TUBE	
39416018	39416018	1	INNER TUBE	
39416020	39416020	1	INNER TUBE	
53143712	53143712	1	SPACER	
58042746	58042746	1	RIM	
58043250	58043250	1	RIM	
58044804	58044804	1	RIM	
58048330	58048330	1	RIM	
92242460	92242460	1	COUPLE TWINNING RINGS	
92242474	92242474	1	PAIR STEEL CAGE WHEELS D. CM.49	
92243685	92243685	1	PAIR WHEEL SPACERS 6 CM	
92243686	92243686	1	PAIR OF WEIGHTS FOR 8 WHEELS 11 KGS	
92248715	92248715	1	PAIR OF WEIGHTS FOR 10 WHEELS 15 KGS	
92248720	92248720	1	PAIR OF WEIGHTS FOR 12 AND 15 WHEELS - 34 KGS	
92249993	92249993	0	STEEL CAGE WHEELS D. 58 (PAIR)	
92257779	92257779	1	CAGE WHEELS DIAM. 43 (PAIR) FOR 720/730	

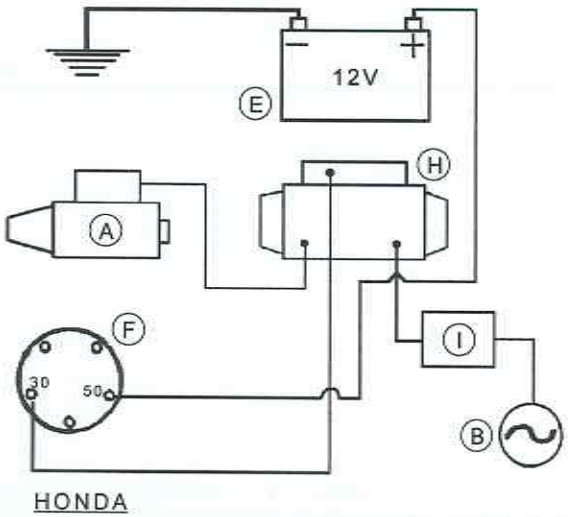

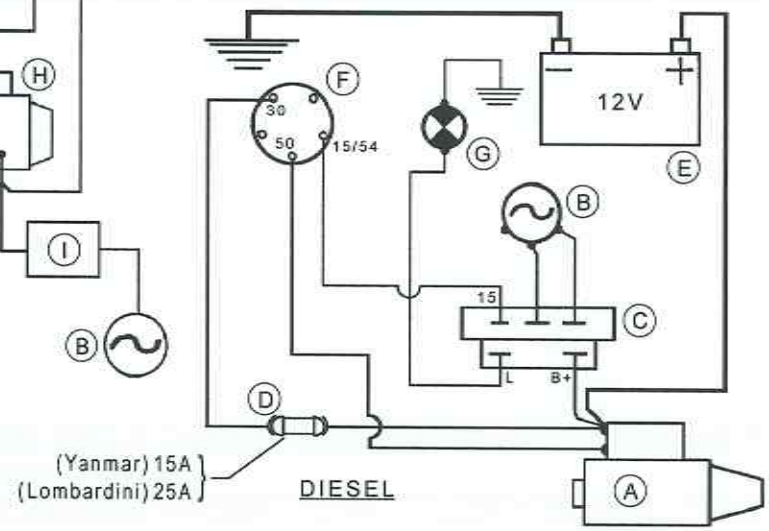

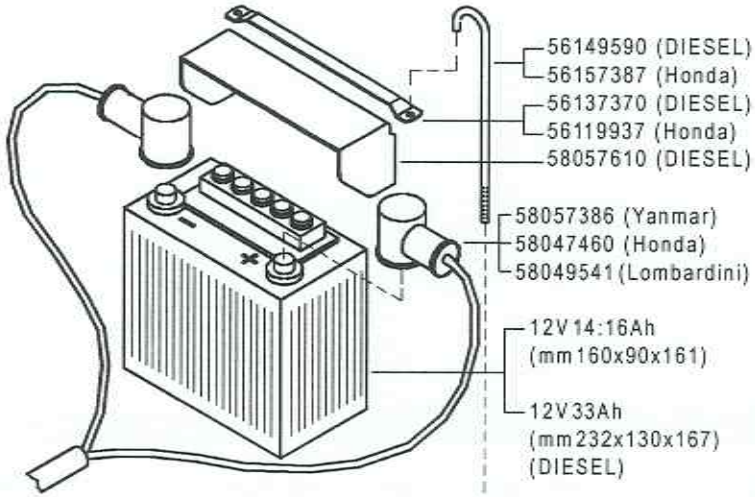

A	B	C	D
MOTORINO D'AVVIAMENTO STARTER DÉMARREUR MOT. DE ARRANQUE ANLASSMOTOR	GENERATORE GENERATOR GÉNÉRATEUR GENERADOR GENERATOR	REGOLATORE REGULATOR RÉGULATEUR REGULADOR REGLER	FUSIBILI FUSES FUSIBLES FUSIBLES SCHMELZSICHERUNGEN

E	F	G	H	I
BATTERIA BATTERY BATTERIE BATERIA BATTERIE	INTERRUTTORE SWITCH INTERRUPTEUR INTERRUPTOR SCHALTER	SPIA CARICA BATTERIA BATTERY LONG WARN. LIGHT TEMOIN CHARG. BATTERIE LUZ CARGA BATERIA BATTERIELADUNG KTRL. LAMPE	SOLENOIDE SOLENOID SOLÉNOÏDE SOLENOIDE SOLENOID	DIODO DIODE DIODE DIODO DIODE

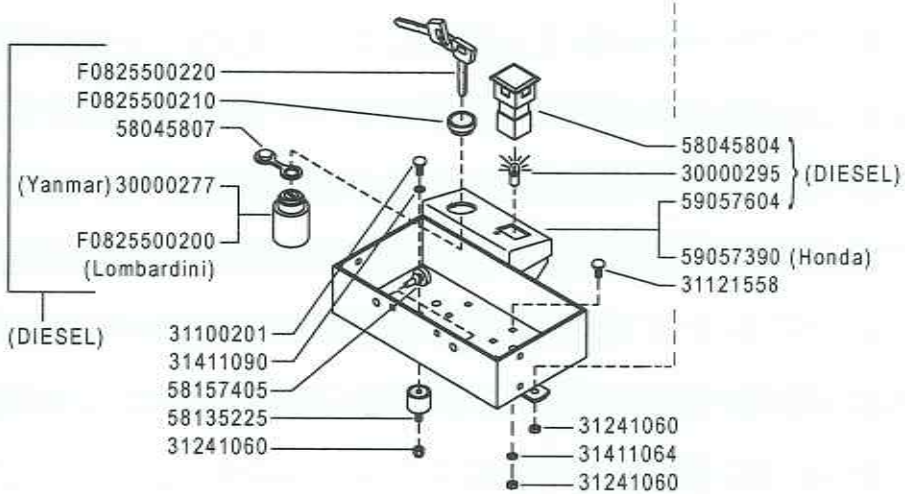

BCS	700 serie PS PowerSafe ®	**AVVIAMENTO ELETTRICO** ELECTRIC STARTER ARRANQUE ELECTRICO DÉMARRAGE ELECTRIQUE ELEKTROSTART	DALLA MACCHINA FROM THE MACHINE DE LA MACHINE DE LA MAQUINA AB DER MASCHINE N.	**Q01**	Rev. 0
				05/2009	

2ENNE

Pos.	Code	Q.ty	Description	Notes
30000277	30000277	1	SWITCH	
30000295	30000295	1	LAMP	
31100201	31100201	1	SCREW TTQ M6X12 UNI 5731	
31121558	31121558	0	SCREW TTQ M6X16 UNI 5731	
31241060	31241060	1	SELFLOCK NUT M6	
31411064	31411064	1	WASHER 6,4x12,5	
31411090	31411090	1	WASHER 9x24	
56119937	56119937	1	BATTERY SUPPORT	
56137370	56137370	1	BATTERY BRACKET	
56149590	56149590	1	BATTERY BRACKET	
56157387	56157387	1	ROD	
58045804	58045804	1	WARNING LIGHT	
58045807	58045807	1	LOCK COVER	
58047460	58047460	1	WIRING	
58049541	58049541	1	WIRING	
58057386	58057386	1	WIRING	
58057610	58057610	1	BOX	
58135225	58135225	0	VIBRATION-DAMPING	
58157405	58157405	1	PLUG	
59057390	59057390	1	BOX	
59057604	59057604	1	BOX	
F0825500	F0825500200	1	CHANGE-OVER SWITCH	
F0825500	F0825500210	1	RING NUT	
F0825500	F0825500220	1	KEY	

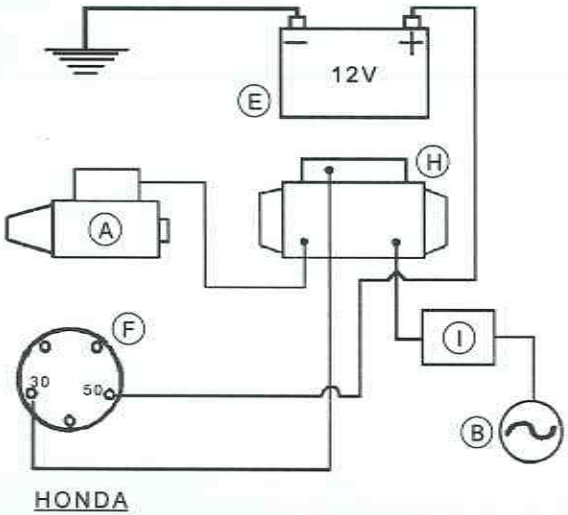

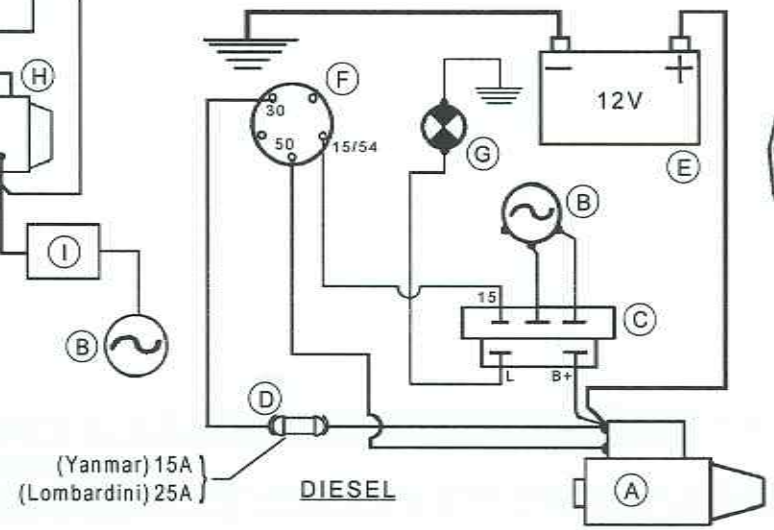

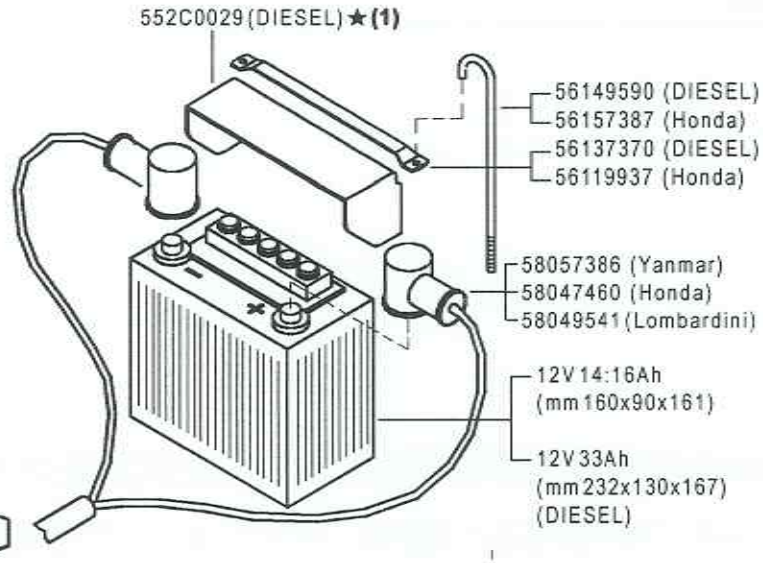

A	B	C	D
MOTORINO D'AVVIAMENTO STARTER DÉMARREUR MOT. DE ARRANQUE ANLASSMOTOR	GENERATORE GENERATOR GÉNÉRATEUR GENERADOR GENERATOR	REGOLATORE REGULATOR RÉGULATEUR REGULADOR REGLER	FUSIBILI FUSES FUSIBLES FUSIBLES SCHMELZSICHERUNGEN

E	F	G	H	I
BATTERIA BATTERY BATTERIE BATERIA BATTERIE	INTERRUTTORE SWITCH INTERRUPTEUR INTERRUPTOR SCHALTER	SPIA CARICA BATTERIA BATTERY LONG WARN. LIGHT TEMOIN CHARG. BATTERIE LUZ CARGA BATERIA BATTERIELADUNG KTRL. LAMPE	SOLENOIDE SOLENOID SOLÉNOÏDE SOLENOIDE SOLENOID	DIODO DIODE DIODE DIODO DIODE

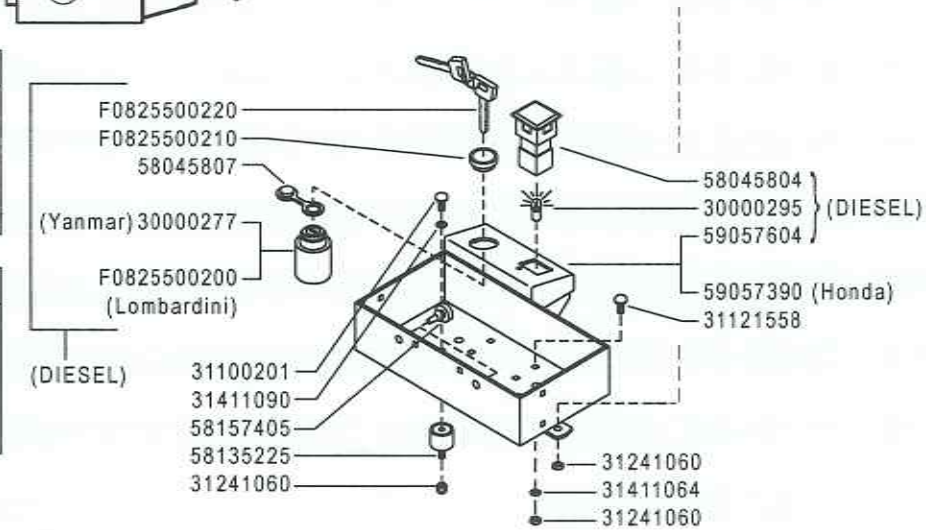

(1) sostituisce **58057610**

BCS	700 serie PS PowerSafe ®	**AVVIAMENTO ELETTRICO** ELECTRIC STARTER / DÉMARRAGE ELECTRIQUE ARRANQUE ELECTRICO / ELEKTROSTART	DALLA MACCHINA FROM THE MACHINE DE LA MACHINE DE LA MAQUINA AB DER MASCHINE ★N.	884219	**Q01** Rev. 1 05/2011

ZENNE

Pos.	Code	Q.ty	Description	Notes
30000277	30000277	1	SWITCH	
30000295	30000295	1	LAMP	
31100201	31100201	1	SCREW TTQ M6X12 UNI 5731	
31121558	31121558	0	SCREW TTQ M6X16 UNI 5731	
31241060	31241060	1	SELFLOCK NUT M6	
31411064	31411064	1	WASHER 6,4x12,5	
31411090	31411090	1	WASHER 9x24	
552C0029	552C0029	1	COPERCHIO BATTERIA 750	
56119937	56119937	1	BATTERY SUPPORT	
56137370	56137370	1	BATTERY BRACKET	
56149590	56149590	1	BATTERY BRACKET	
56157387	56157387	1	ROD	
58045804	58045804	1	WARNING LIGHT	
58045807	58045807	1	LOCK COVER	
58047460	58047460	1	WIRING	
58049541	58049541	1	WIRING	
58057386	58057386	1	WIRING	
58135225	58135225	0	VIBRATION-DAMPING	
58157405	58157405	1	PLUG	
59057390	59057390	1	BOX	
59057604	59057604	1	BOX	
F0825500	F0825500200	1	CHANGE-OVER SWITCH	
F0825500	F0825500210	1	RING NUT	
F0825500	F0825500220	1	KEY	

58056864

58056866

58057746

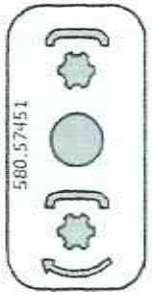

58057451

58057676

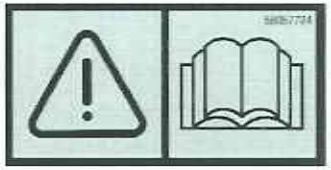

58057724

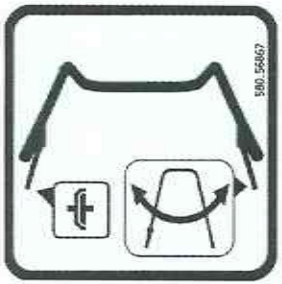

58056867

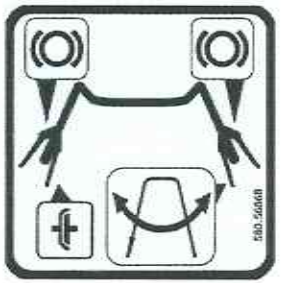

58056868

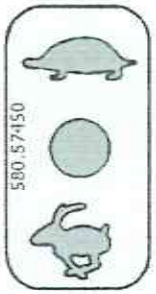

58057450

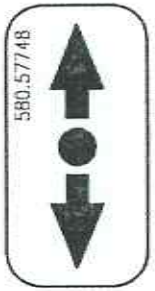

58057748

58057677

58057767

58056869

58057732

58057747

58057625

58093089

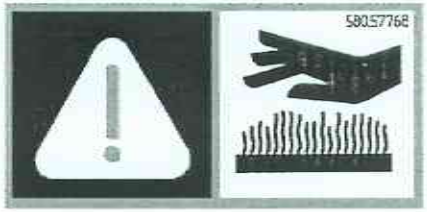

58057768

BCS	700 serie PS PowerSafe ®	**ADESIVE** STICKERS ADHESIVOS	AUTOCOLLANTS AUFKLEBES	DALLA MACCHINA FROM THE MACHINE DE LA MACHINE DE LA MAQUINA AB DER MASCHINE N.	**R01** Rev. 0 05/2009

Pos.	Code	Q.ty	Description	Notes
58056864	58056864	1	DECAL	
58056866	58056866	1	DECAL	
58056867	58056867	1	DECAL	
58056868	58056868	1	DECAL	
58056869	58056869	1	DECAL	
58057450	58057450	1	DECAL	
58057451	58057451	1	DECAL	
58057625	58057625	1	DECAL	
58057676	58057676	1	DECAL	
58057677	58057677	1	DECAL	
58057724	58057724	1	DECAL	
58057732	58057732	1	DECAL	
58057746	58057746	1	DECAL	
58057747	58057747	1	DECAL	
58057748	58057748	1	DECAL	
58057767	58057767	1	DECAL	
58057768	58057768	1	DECAL	
58093089	58093089	1	DECAL	

710

58057647

720

58057648

730

58057649

740

58057668

54.5

BCS

58057643

62

BCS

53048656

93

BCS

53093088

PowerSafe®

53057666

746

58057456

580.57759

BCS

58057759

BCS	700 serie PS PowerSafe ®	ADESIVE STICKERS / AUTOCOLLANTS ADHESIVOS / AUFKLEBES	DALLA MACCHINA FROM THE MACHINE DE LA MACHINE DE LA MAQUINA AB DER MASCHINE N.		R02	Rev. 0
					05/2009	

2ENNE

Pos.	Code	Q.ty	Description	Notes
53048656	53048656	1	OVAL LOGO	
53057666	53057666	1	MARCHIO POWERSAFE	
53093088	53093088	1	OVAL LOGO	
58057456	58057456	1	DECAL	
58057643	58057643	1	OVAL LOGO	
58057647	58057647	1	DECAL	
58057648	58057648	1	DECAL	
58057649	58057649	1	DECAL	
58057668	58057668	1	DECAL	
58057759	58057759	1	DECAL	

53057666

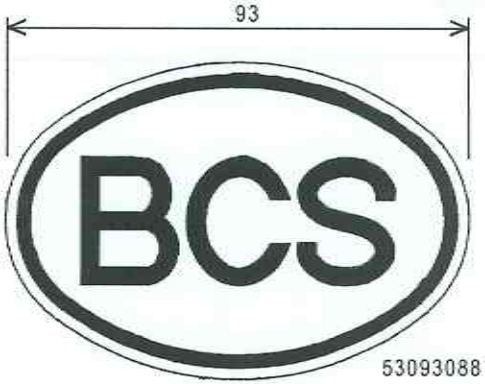

53093088

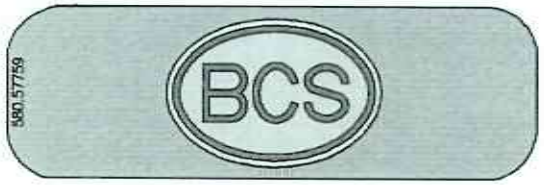

58057759

58057647

58057648

58057649

58057668

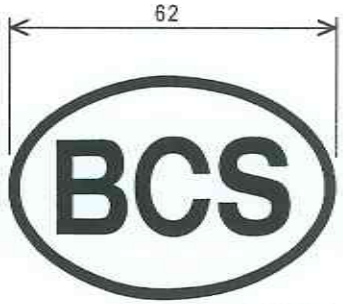

53048656

58057456

58058457★

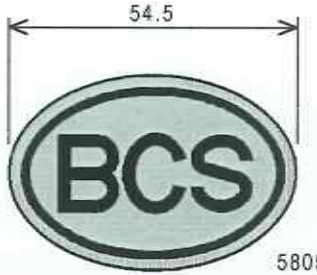

58057643

BCS	700 serie PS PowerSafe ®	**ADESIVE** STICKERS / AUTOCOLLANTS ADHESIVOS / AUFKLEBES	DALLA MACCHINA FROM THE MACHINE DE LA MACHINE DE LA MAQUINA AB DER MASCHINE ★ N.	AGGIORNAMENTO REVISION MISE A JOUR APLAZAMIENTO ANPASSUNG	R02	Rev. 1
					11/2010	

2ENNE

Pos.	Code	Q.ty	Description	Notes
53048656	53048656	1	OVAL LOGO	
53057666	53057666	1	MARCHIO POWERSAFE	
53093088	53093088	1	OVAL LOGO	
58057456	58057456	1	DECAL	
58057643	58057643	1	OVAL LOGO	
58057647	58057647	1	DECAL	
58057648	58057648	1	DECAL	
58057649	58057649	1	DECAL	
58057668	58057668	1	DECAL	
58057759	58057759	1	DECAL	
58058457	58058457	1	DECAL	

PowerSafe® 1

EasyDrive® 2

710 3

720 4

730 5

740 6

746 7

750 8

BCS 9

BCS 10

BCS 11

Pos.	Code	Q.ty	Description	Notes
1	53057666	1	MARCHIO POWERSAFE	
2	53057670	1	DECAL	
3	58058452	1	DECAL	
4	58058453	1	DECAL	
5	58058454	1	DECAL	
6	58058455	1	DECAL	
7	58058456	1	DECAL	
8	58058457	1	DECAL	
9	53093088	1	OVAL LOGO	
10	53048656	1	OVAL LOGO	
11	53058450	1	SMALL OVAL LOGO	

PowerSafe ®
1

EasyDrive ®
2

710
3

720
4

730
5

740
6

746
7

750
8

728
9

738
10

BCS
11

BCS
12

BCS
13

Pos.	Code	Q.ty	Description	Notes
1	53057666	1	MARCHIO POWERSAFE	
2	53057670	1	DECAL	
3	58058452	1	DECAL	
4	58058453	1	DECAL	
5	58058454	1	DECAL	
6	58058455	1	DECAL	
7	58058456	1	DECAL	
8	58058457	1	DECAL	
9	58058485	1	DECAL	
10	58058484	1	DECAL	
11	53093088	1	OVAL LOGO	
12	53048656	1	OVAL LOGO	
13	53058450	1	SMALL OVAL LOGO	